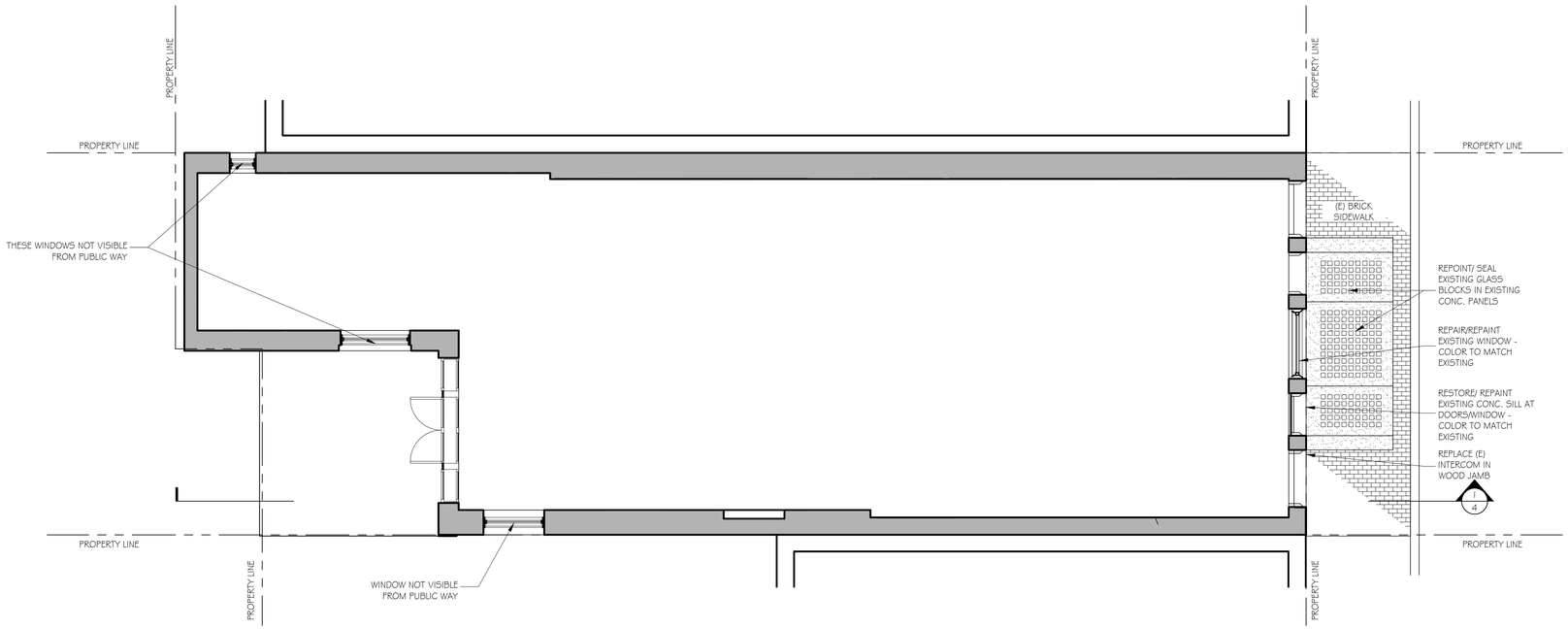

FIRST FLOOR PLAN

SCALE: ¼" = 1'-0"

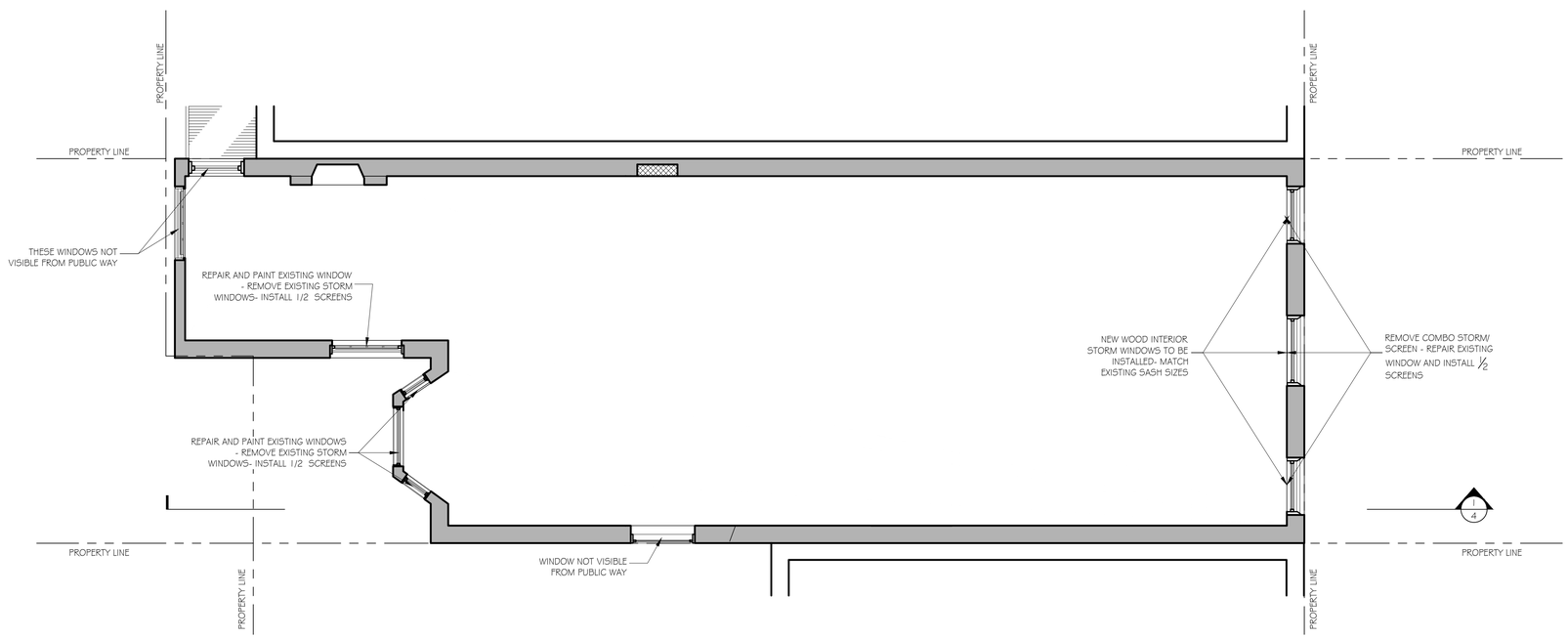

SECOND FLOOR PLAN

SCALE: ¼" = 1'-0"

GRASSI DESIGN GROUP
45 Newbury Street, Suite 506
Boston, MA 02116
Phone 617-956-9992
Fax 917-956-9993
BEAUCHEMIN GRASSI INTERIORS

JOB NO: 2409
SCALE: ¼" = 1'-0"
DATE: 1.21.25
REVISED

YIP RESIDENCE

90 CHESTNUT ST.
BOSTON, MA 02108

FIRST AND SECOND FLOOR PLANS

1

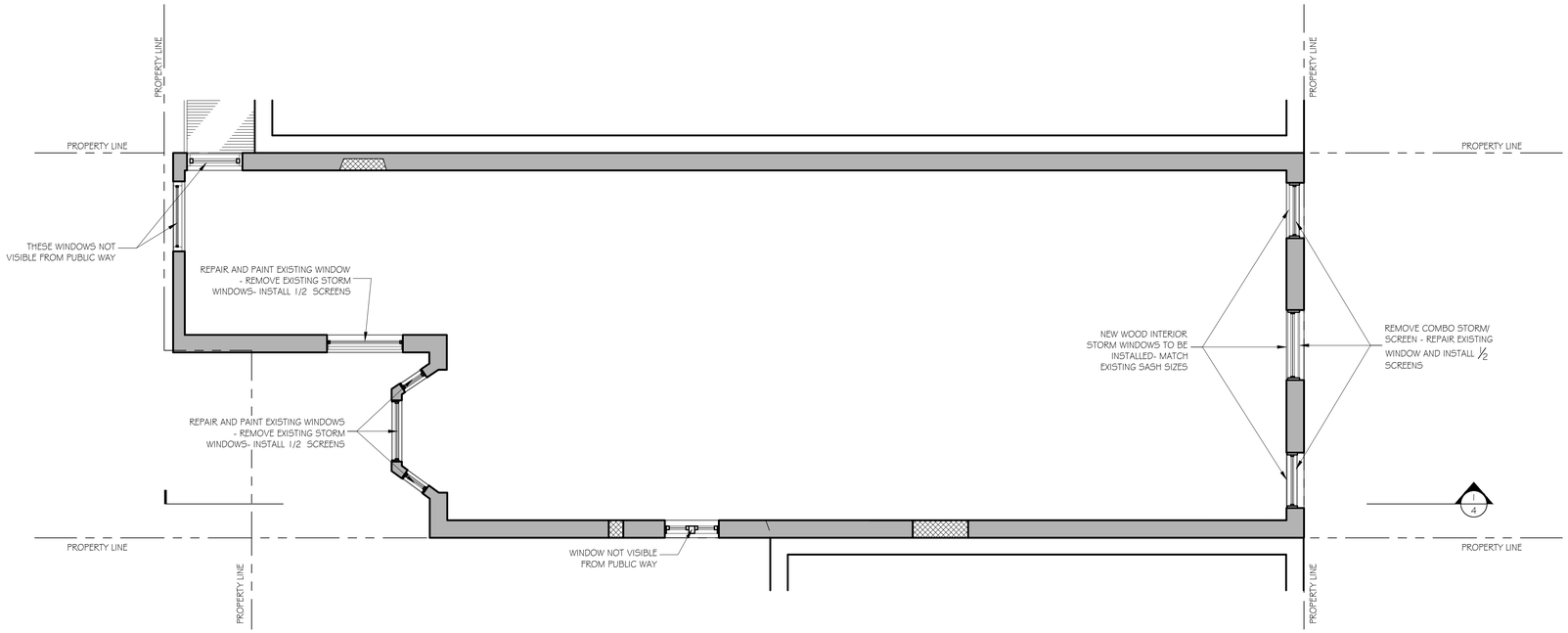

THIRD FLOOR PLAN

SCALE: 1/4" = 1'-0"

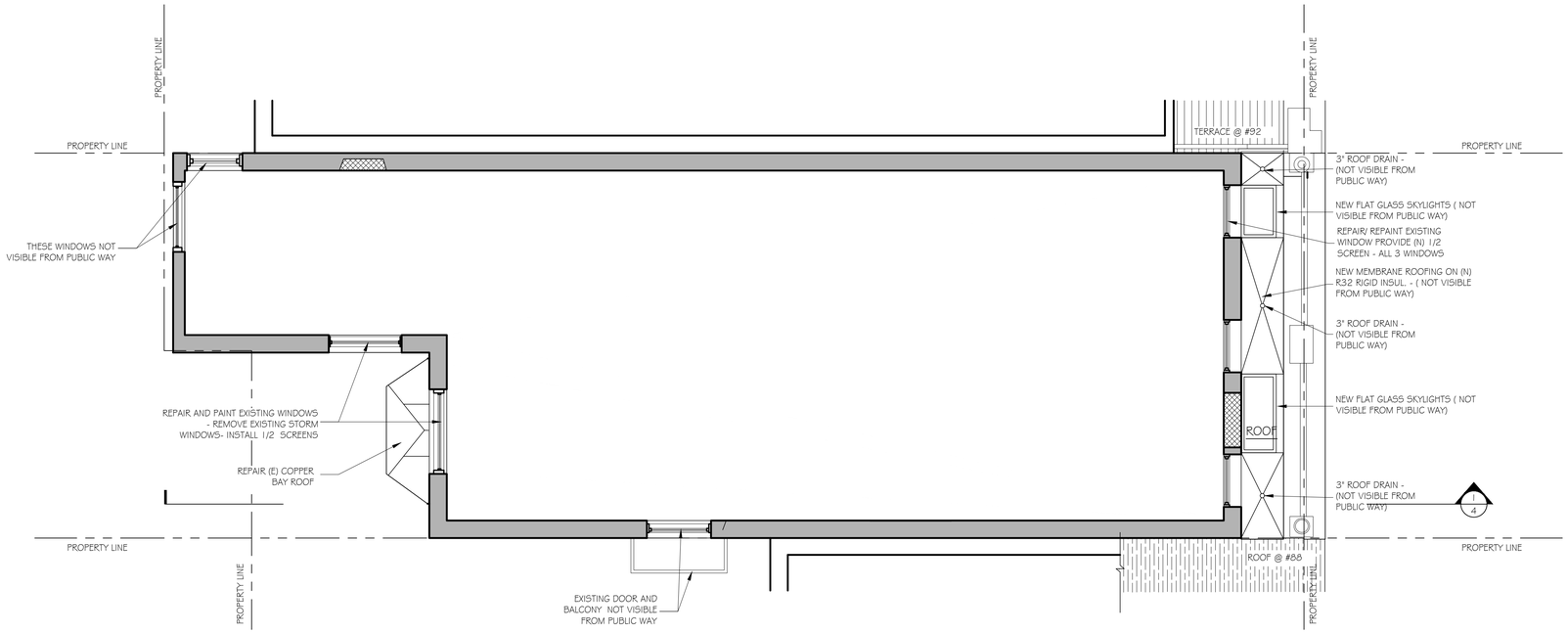

FOURTH FLOOR PLAN

SCALE: 1/4" = 1'-0"

GRASSI DESIGN GROUP
45 Newbury Street, Suite 506
Boston, MA 02116
Phone 617-956-9992
Fax 917-956-9993
BEAUCHEMIN GRASSI INTERIORS

JOB NO: 2409
SCALE: 1/4" = 1'-0"
DATE: 1.21.25
REVISED

YIP RESIDENCE
90 CHESTNUT ST.
BOSTON, MA 02108

THIRD & FOURTH FLOOR PLANS

2

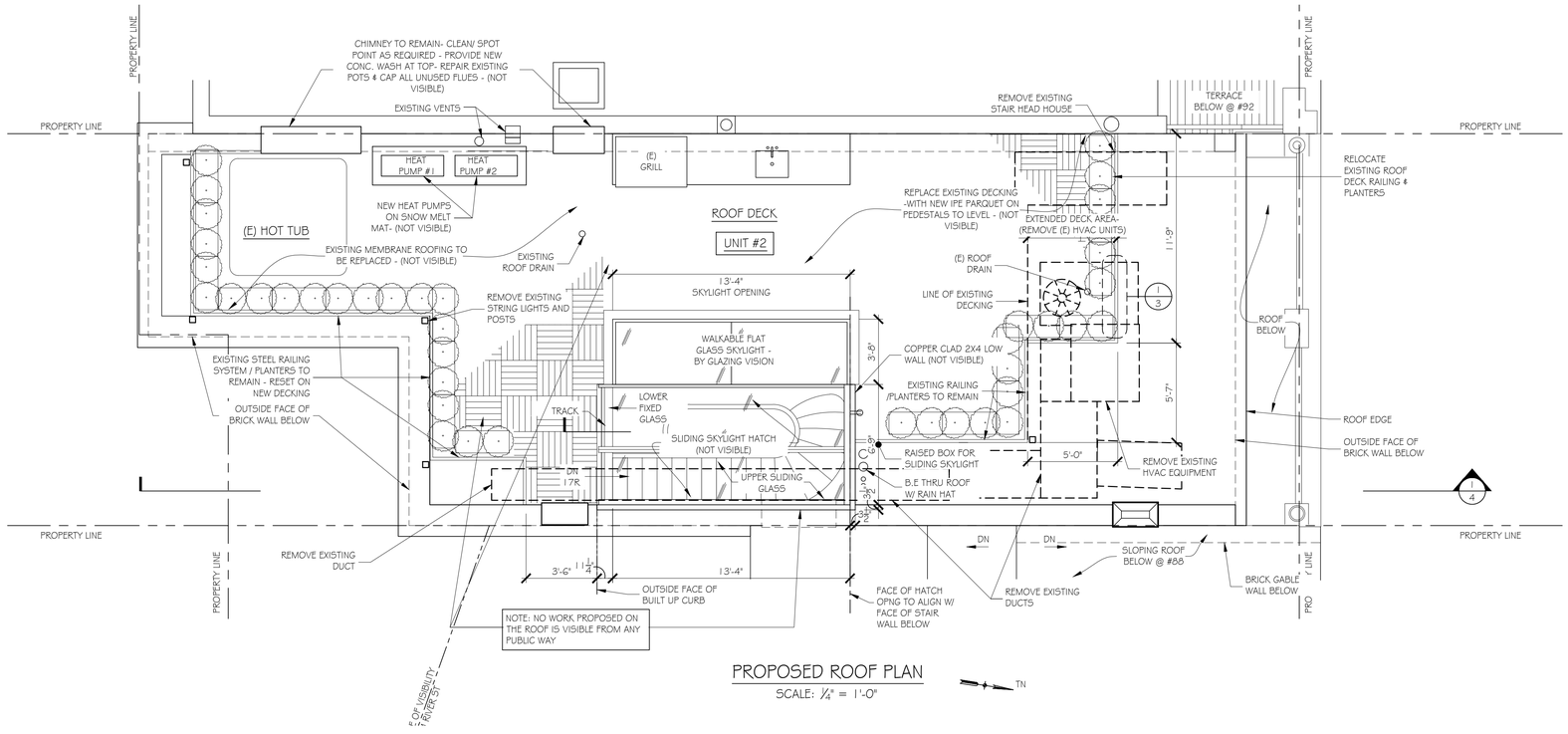

PROPOSED ROOF PLAN

SCALE: ¼" = 1'-0"

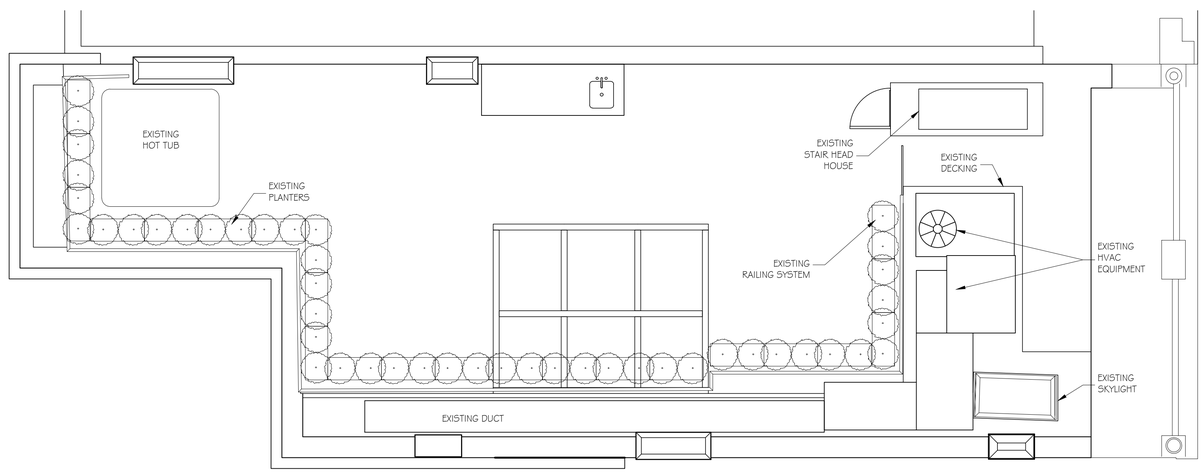

EXISTING ROOF PLAN

SCALE: ¼" = 1'-0"

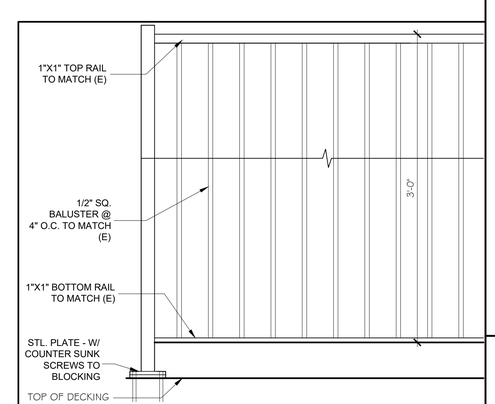

1 RAILING DETAIL @ ROOF DECK - TO MATCH EXISTING $1\frac{1}{2}$" = 1'-0"

45 Newbury Street, Suite 506
Boston, MA 02116
Phone 617-956-9992
Fax 917-956-9993

GRASSI DESIGN GROUP

BEAUCHEMIN GRASSI INTERIORS

JOB NO: 2409
SCALE: ¼" = 1'-0"
DATE: 1.21.25
REVISED

YIP RESIDENCE

90 CHESTNUT ST.
BOSTON, MA 02108

PROPOSED ROOF PLAN, EXISTING ROOF PLAN AND RAILING DETAIL

3

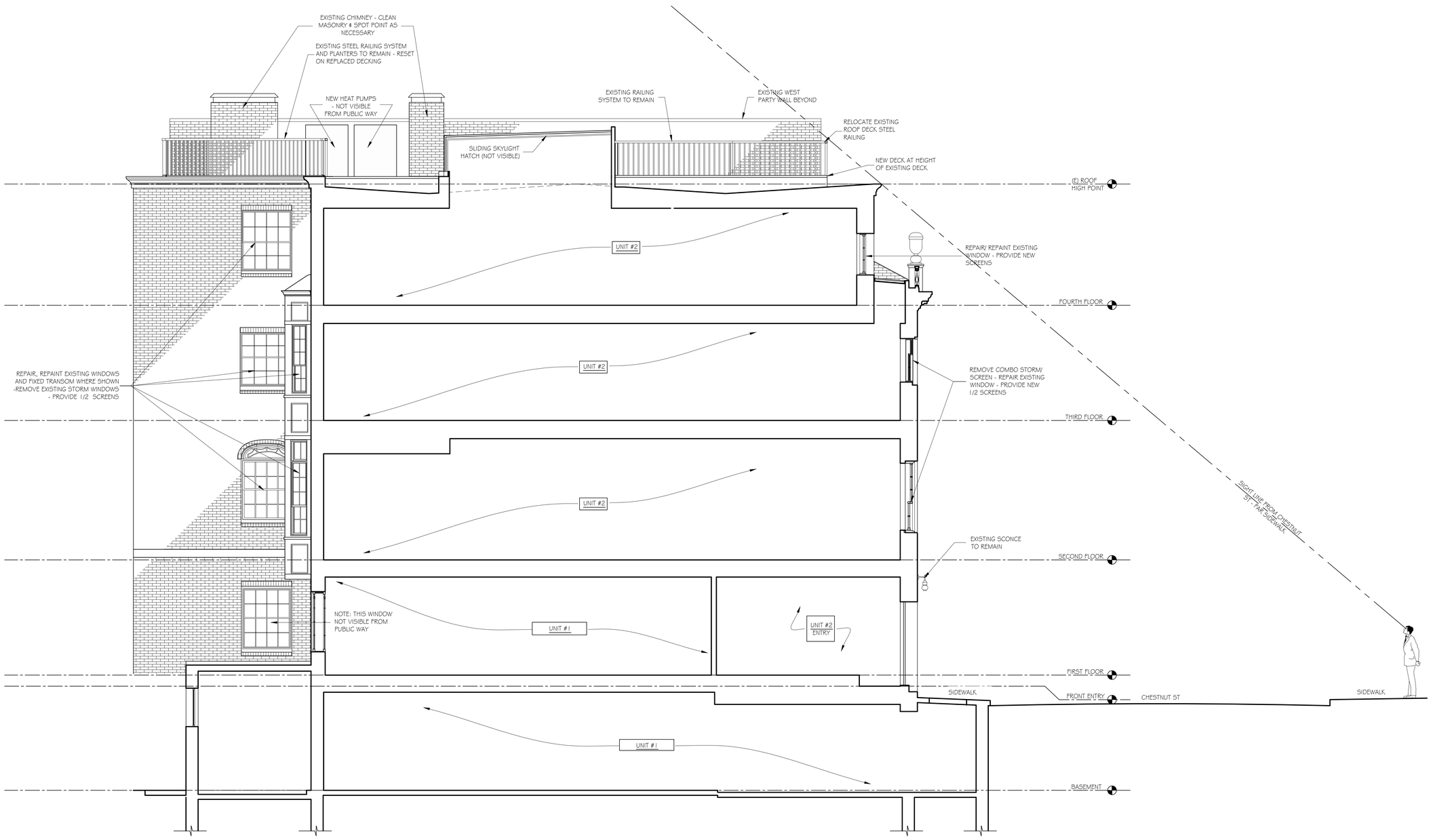

1 BUILDING SECTION/ EAST REAR ELEVATION
1/4" = 1'-0"

GRASSI DESIGN GROUP
45 Newbury Street, Suite 506
Boston, MA 02116
Phone 617-956-9992
Fax 917-956-9993
BEAUCHEMIN GRASSI INTERIORS

JOB NO: 2409
SCALE: 1/4" = 1'-0"
DATE: 1.21.25
REVISED

YIP RESIDENCE
90 CHESTNUT ST.
BOSTON, MA 02108

BUILDING SECTION & PARTIAL EAST ELEVATION

4

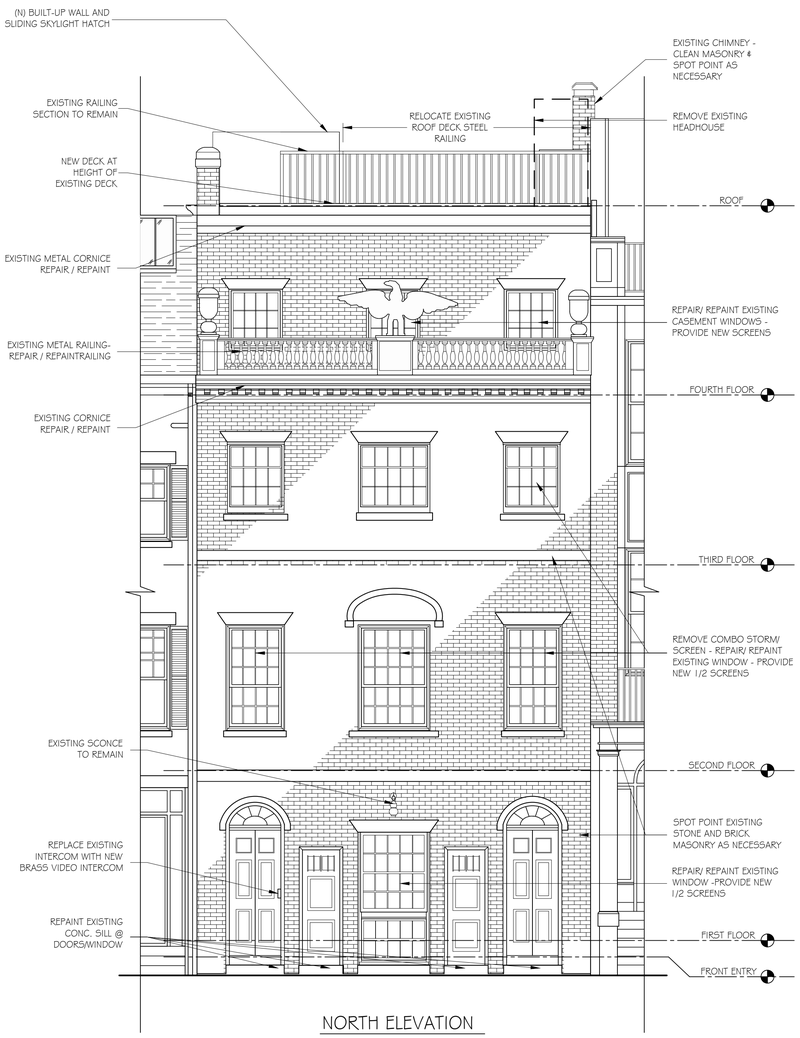

NORTH ELEVATION

1/4" = 1'-0"

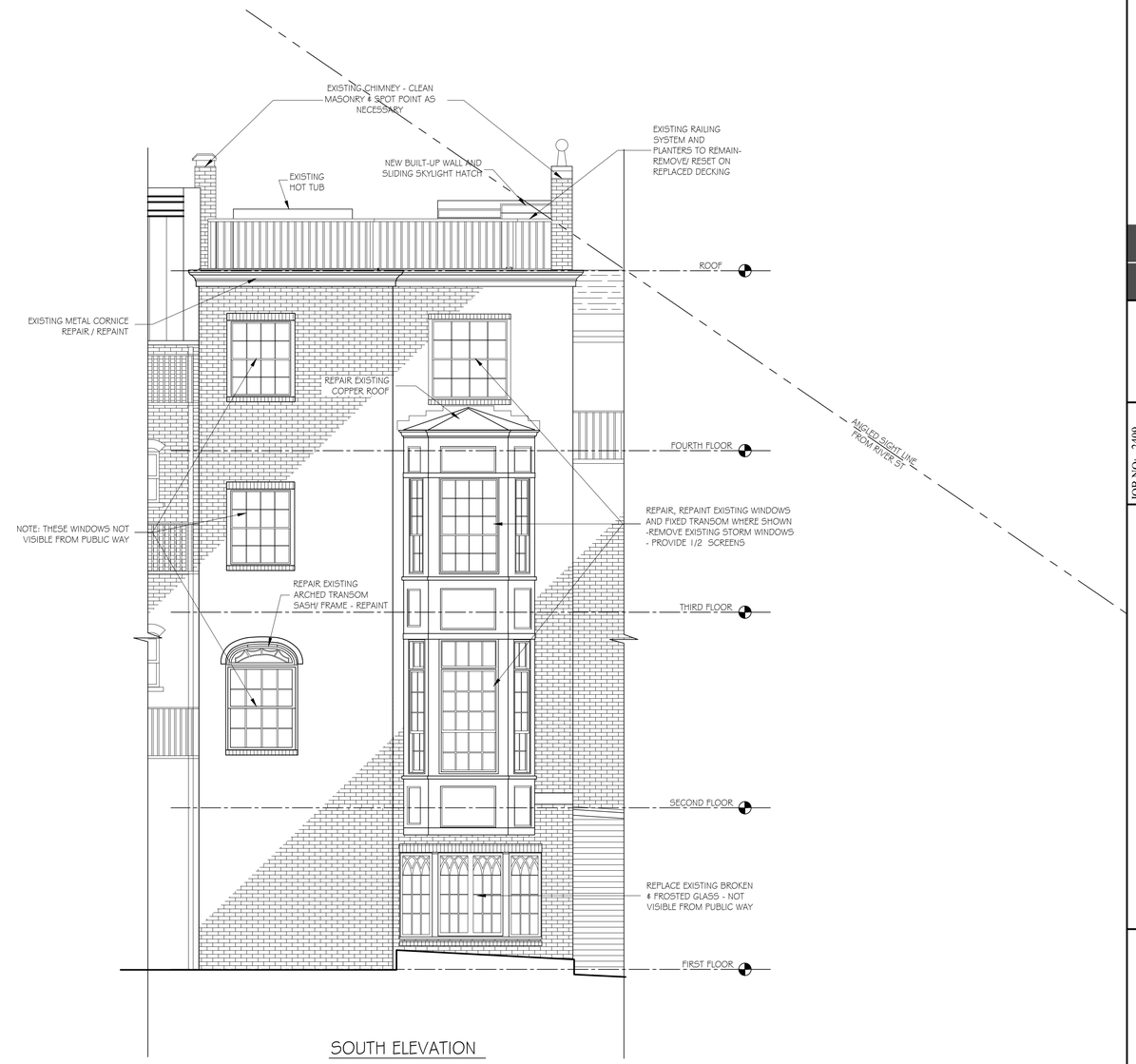

SOUTH ELEVATION

1/4" = 1'-0"

GRASSI DESIGN GROUP
45 Newbury Street, Suite 506
Boston, MA 02116
Phone 617-956-9992
Fax 917-956-9993

BEAUCHEMIN GRASSI INTERIORS

JOB NO: 2409
SCALE: 1/4" = 1'-0"
DATE: 1.21.25
REVISED

YIP RESIDENCE
90 CHESTNUT ST.
BOSTON, MA 02108

NORTH AND SOUTH ELEVATIONS

5

SEDONA

13' 4"

Beacon Hill
Permit
Parking
Only
Street Cleaning
1st, 3rd & 5th THURSDAY
8am-12noon
Tow Zone
5WW 169
Massachusetts

Beacon Hill
Permit
Parking
Only
2 Parking Limit
5WW 169

2 Parking Limit
8am-6pm
Monday-Friday

FLAME RETARDANT
THE THROWN DEPOT
(800) 404-4036
CAUTION