EXISTING FRONT ELEVATION

EXISTING FRONT YARD
358
360

EXISTING FRONT GATE & STOOP

EXISTING FRONT ELEVATION

EXISTING REAR ELEVATION

EXISTING RETAINING WALL
& WOOD FENCE / GARDEN
WALL @ #360

EXISTING GARDEN /
GARDEN WALL @ #360

EXISTING GARDEN /
GARDEN / ELL WALL @ #356

EXISTING PARKING AREA

EXISTING REAR ELEVATION

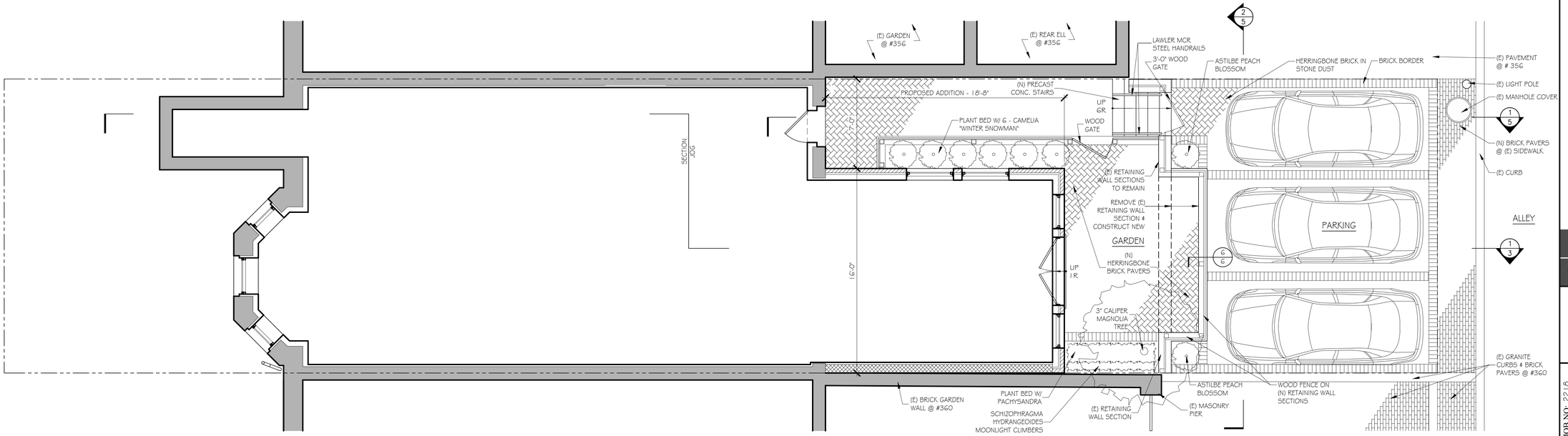

GARDEN LEVEL FLOOR PLAN

1/4" = 1'-0"

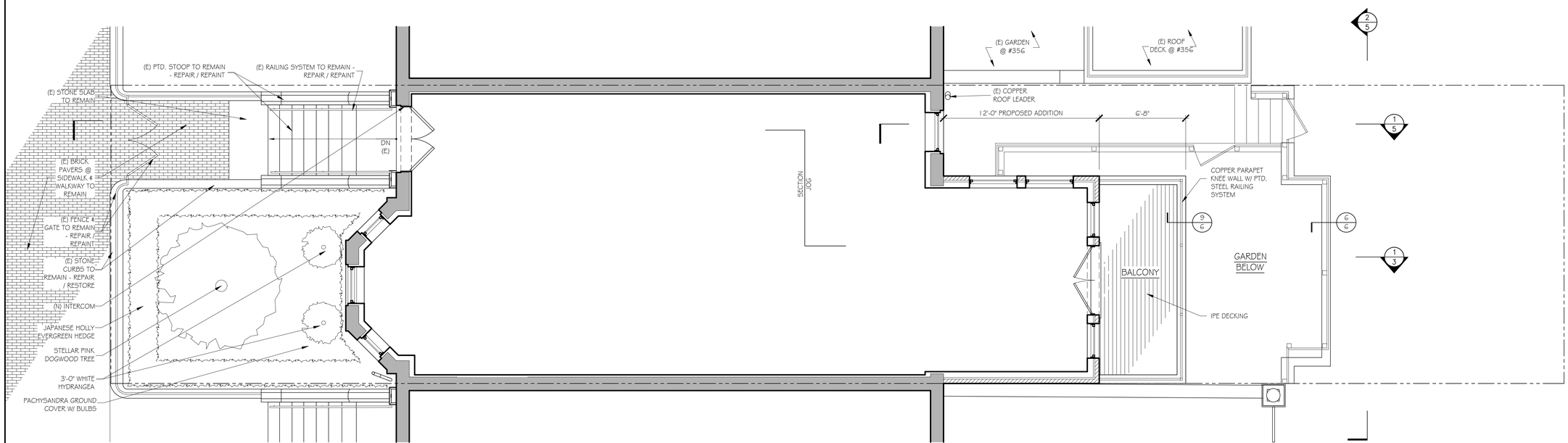

FIRST FLOOR PLAN

1/4" = 1'-0"

46 Waltham Street, Suite 3A
Boston, MA 02118
Phone 617-956-9992
Fax 917-956-9993

GRASSI DESIGN GROUP

BEAUCHEMIN GRASSI INTERIORS

JOB NO: 2218
SCALE: 1/4"=1'-0"
DATE: 01/18/23
REVISED

358 MARLBOROUGH STREET
BOSTON, MA

GARDEN LEVEL & FIRST FLOOR PLANS

1

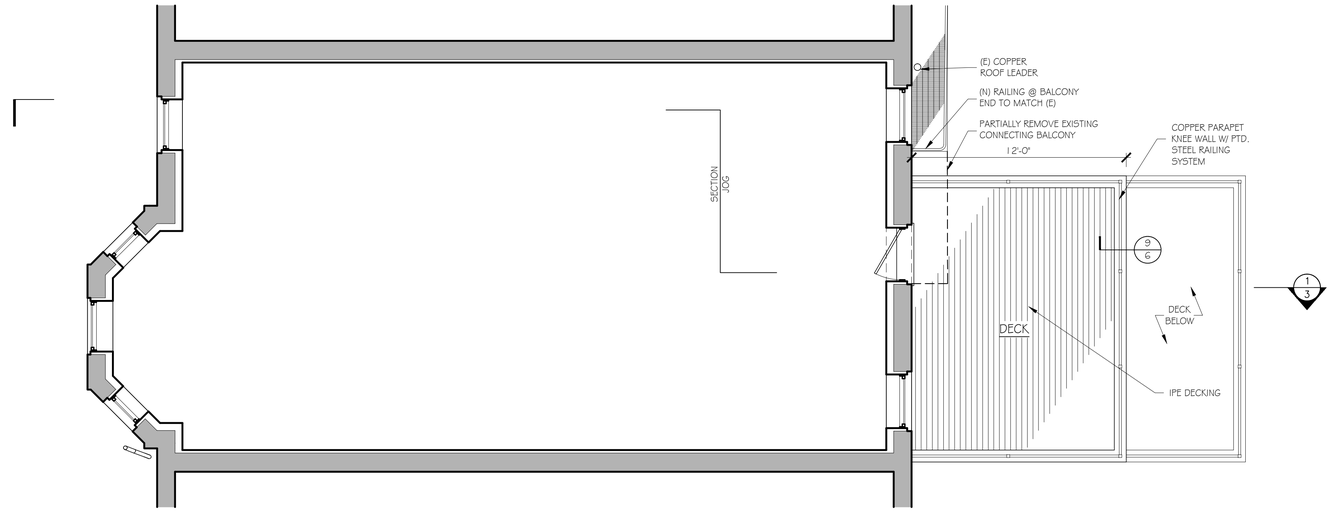

SECOND FLOOR PLAN

¼" = 1'-0"

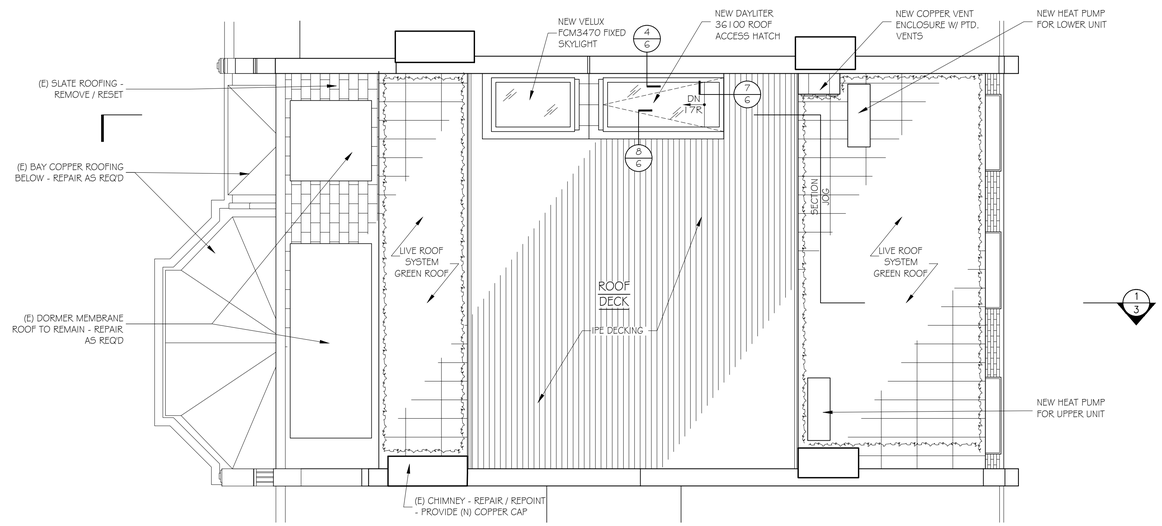

ROOF PLAN

¼" = 1'-0"

46 Waltham Street, Suite 3A
Boston, MA 02118
Phone 617-956-9992
Fax 917-956-9993

GRASSI DESIGN GROUP

BEAUCHEMIN GRASSI INTERIORS

JOB NO: 2218
SCALE: 1/4"=1'-0"
DATE: 01/18/23
REVISED

358 MARLBOROUGH STREET
BOSTON, MA

SECOND FLOOR & ROOF PLANS

2

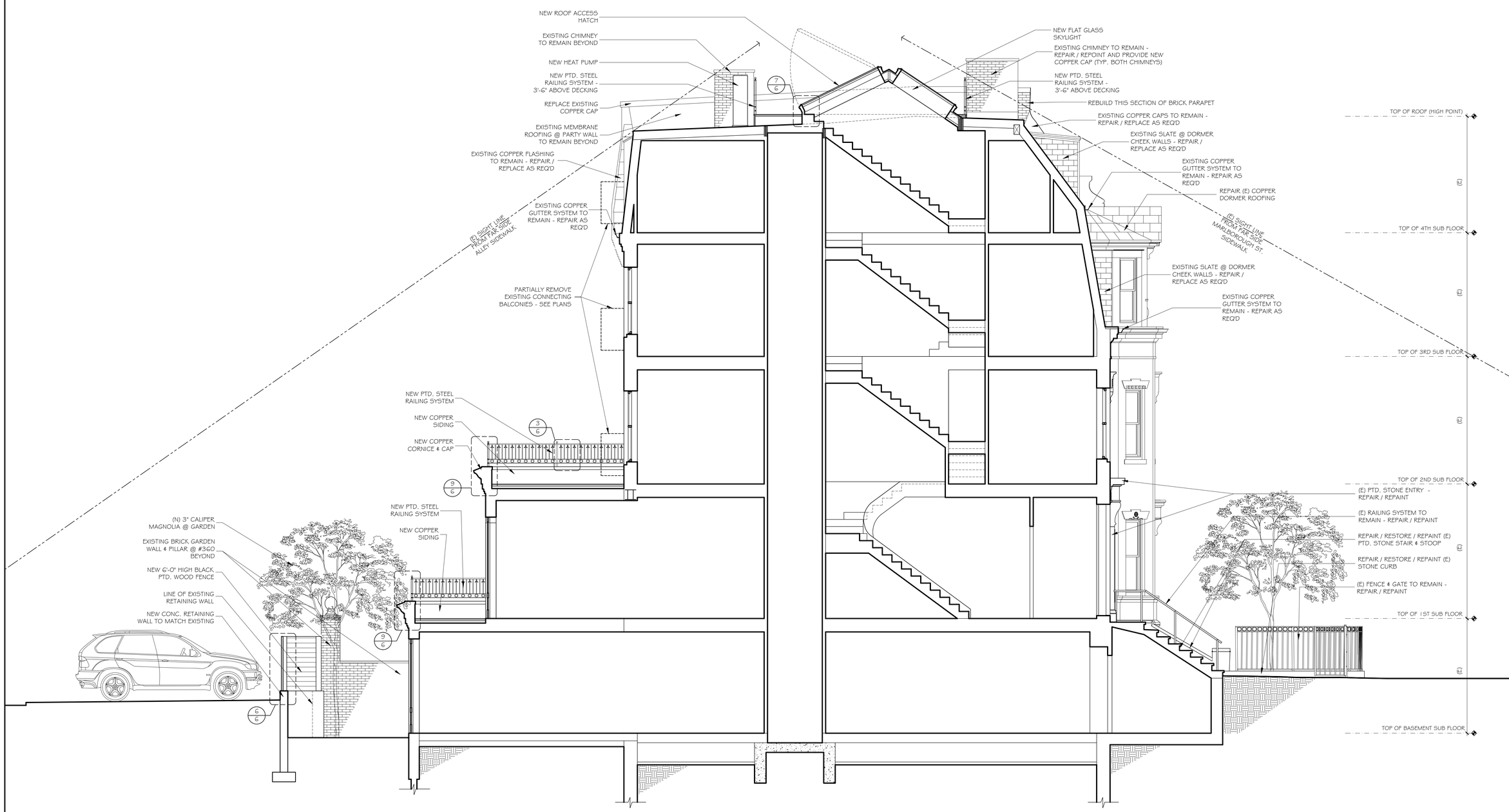

1 BUILDING SECTION

GRASSI DESIGN GROUP
46 Waltham Street, Suite 3A
Boston, MA 02118
Phone 617-956-9992
Fax 617-956-9993
BEAUCHEMIN GRASSI INTERIORS

JOB NO: 2218
SCALE: 1/4"=1'-0"
DATE: 01/18/23
REVISED

358 MARLBOROUGH STREET
BOSTON, MA

BUILDING SECTION

3

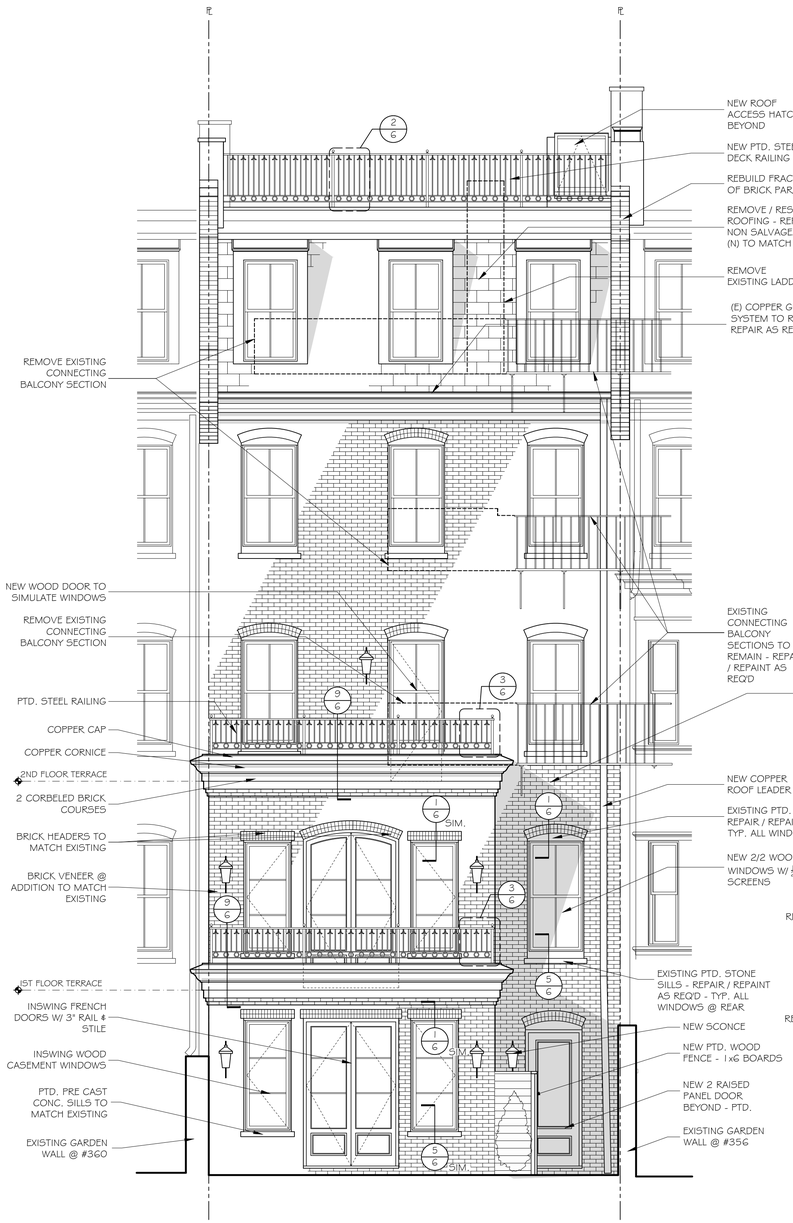

SOUTH ELEVATION @ GARDEN

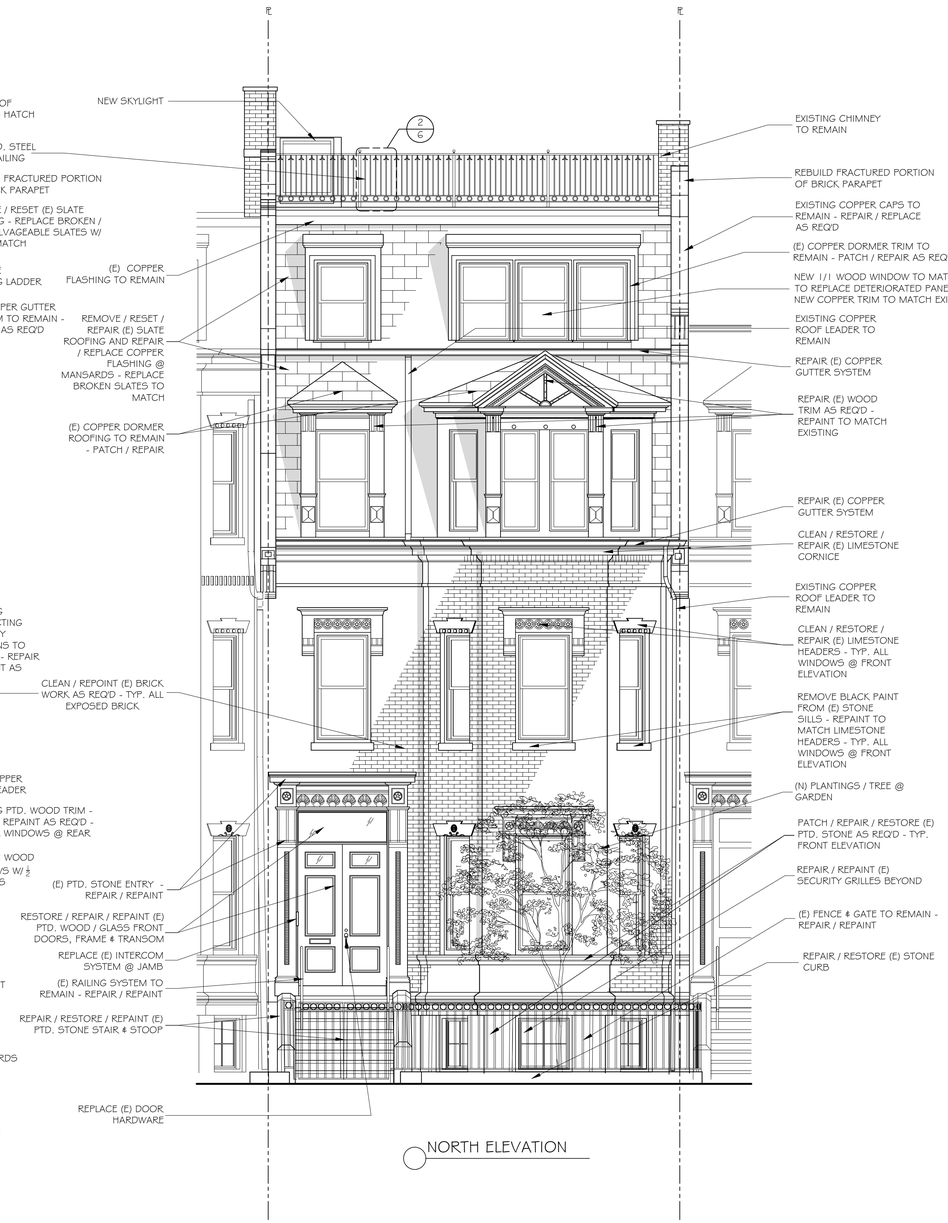

NORTH ELEVATION

GRASSI DESIGN GROUP
46 Waltham Street, Suite 3A
Boston, MA 02118
Phone 617-956-9992
Fax 917-956-9993
BEAUCHEMIN GRASSI INTERIORS

JOB NO: 2218
SCALE: 1/4"=1'-0"
DATE: 01/18/23
REVISED

358 MARLBOROUGH STREET
BOSTON, MA

NORTH AND SOUTH BUILDING ELEVATIONS

4

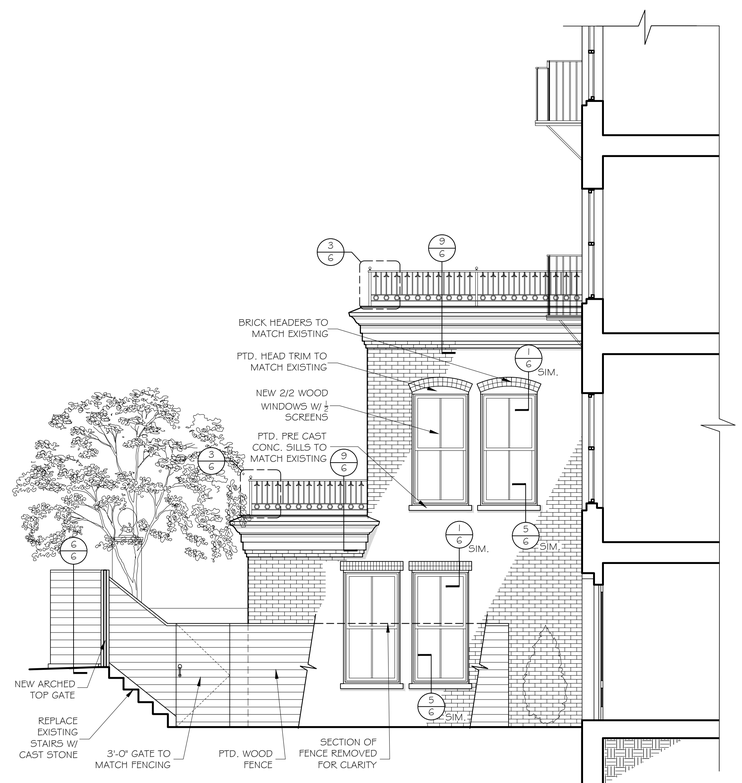

1 SECTION / ELEVATION LOOKING EAST

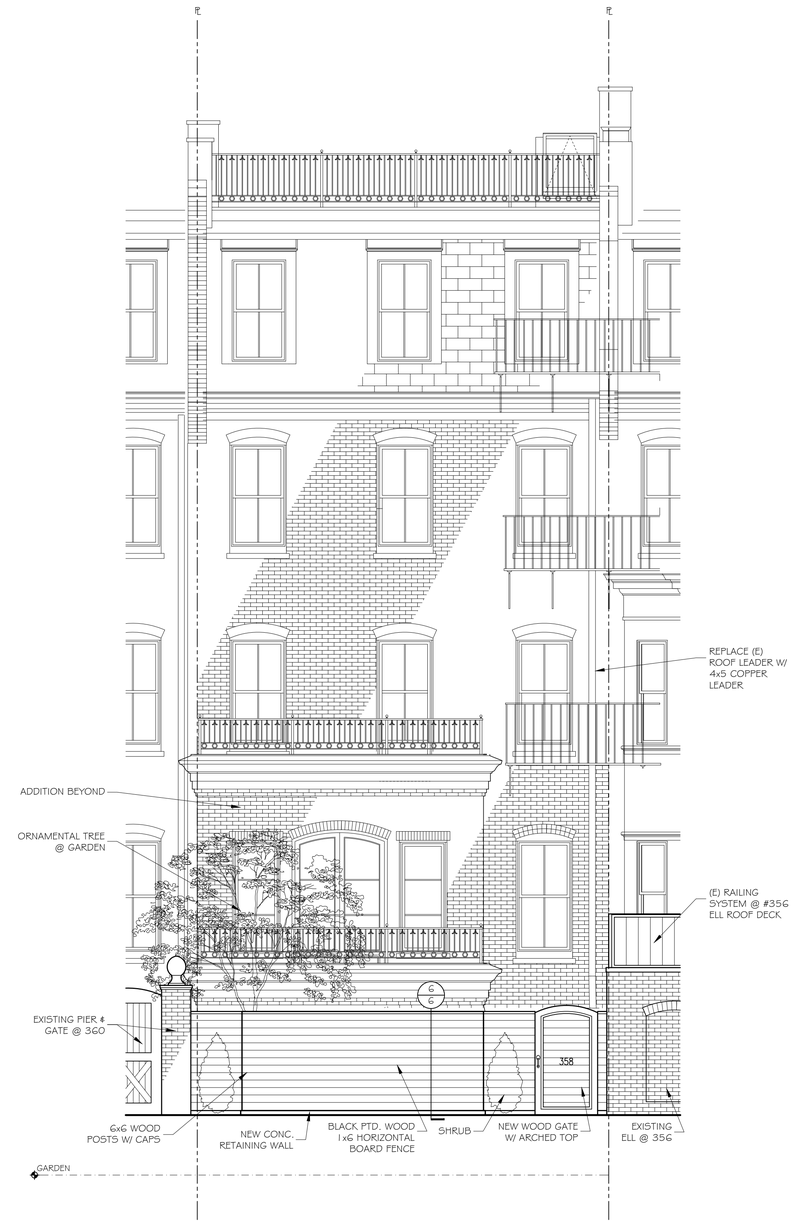

2 SOUTH ELEVATION @ ALLEY LINE

GRASSI DESIGN GROUP
46 Waltham Street, Suite 3A
Boston, MA 02118
Phone 617-956-9992
Fax 617-956-9993
BEAUCHEMIN GRASSI INTERIORS

JOB NO: 2218
SCALE: 1/4"=1'-0"
DATE: 01/18/23
REVISED

358 MARLBOROUGH STREET
BOSTON, MA

SOUTH BUILDING ELEVATION FROM ALLEY & SECTION / ELEVATION LOOKING EAST

5

EXTERIOR DETAILS

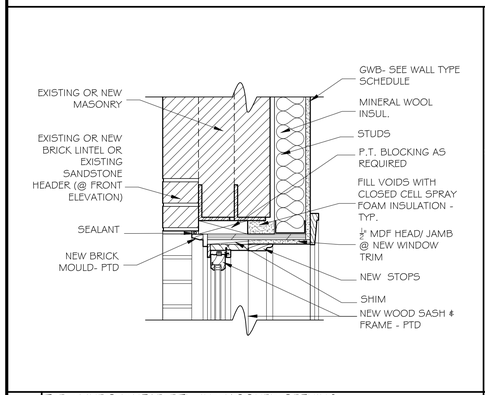

1 TYP. WINDOW HEAD DTL. IN MASONRY OPENING (JAMB SIM.) 1½" = 1'-0"

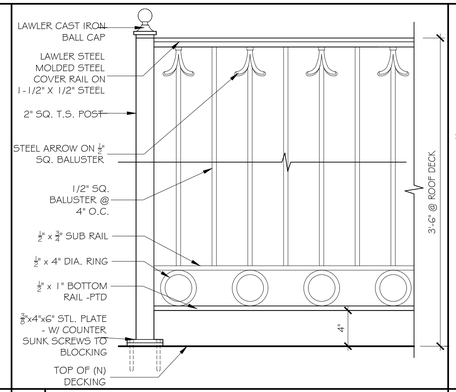

2 RAILING DETAIL @ ROOF DECK 1½" = 1'-0"

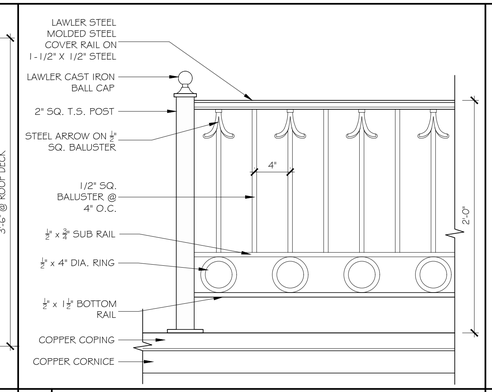

3 PARAPET RAILING DETAIL @ ADDITION 1½" = 1'-0"

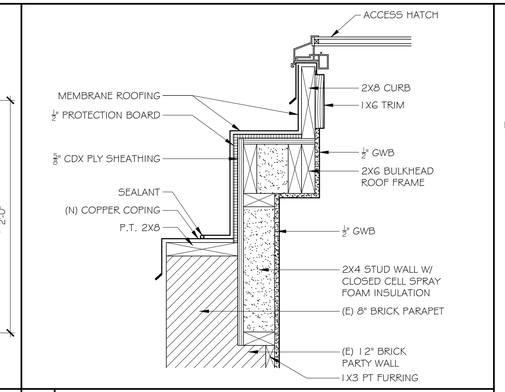

4 ROOF ACCESS HATCH DETAIL @ PARTY WALL 1½" = 1'-0"

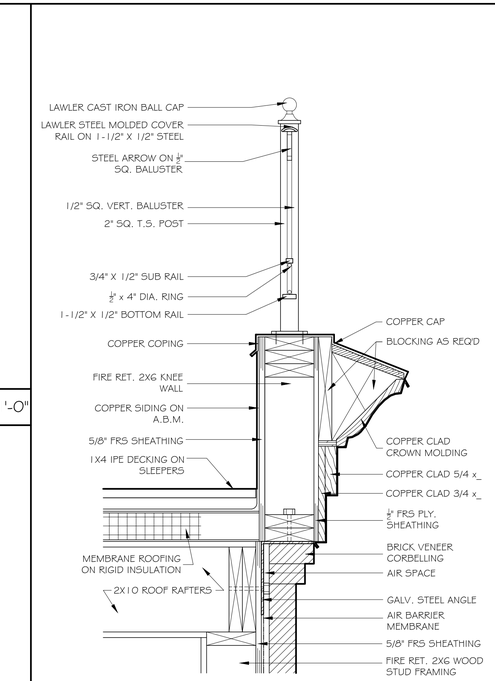

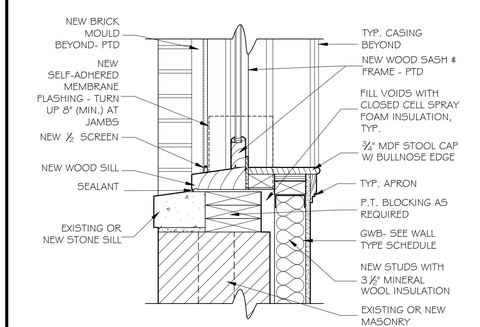

5 TYP. WINDOW SILL DETAIL IN MASONRY OPENING 1½" = 1'-0"

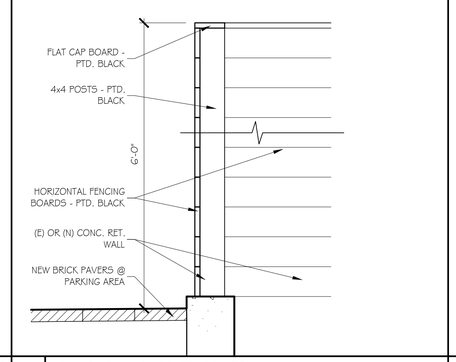

6 HORIZONTAL BOARD FENCE DETAIL 1" = 1'-0"

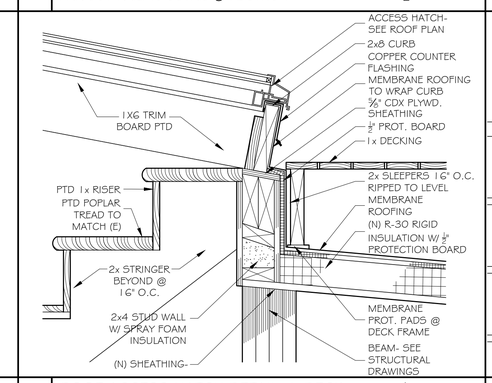

7 ROOF ACCESS HATCH DETAIL @ DECK 1½" = 1'-0"

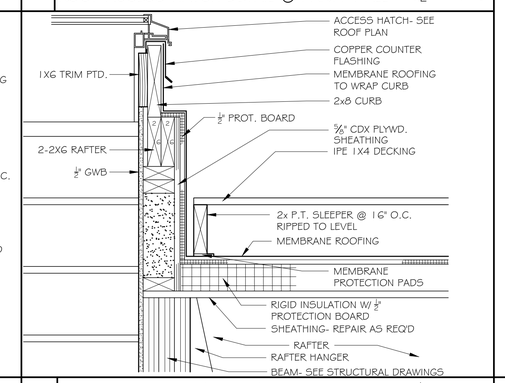

8 ROOF ACCESS HATCH DETAIL 1½" = 1'-0"

9 PARAPET DETAIL @ ADDITION 1½" = 1'-0"

DOOR & WINDOW TYPE ELEVATIONS - SCALE: 1" = 1'-0"

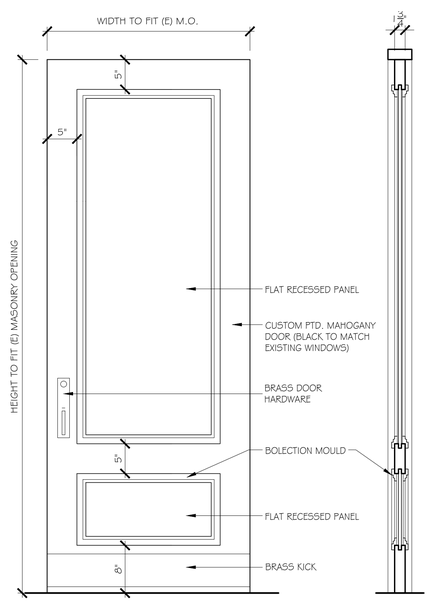

REAR ENTRY DOOR ELEVATION

DOOR SECTION

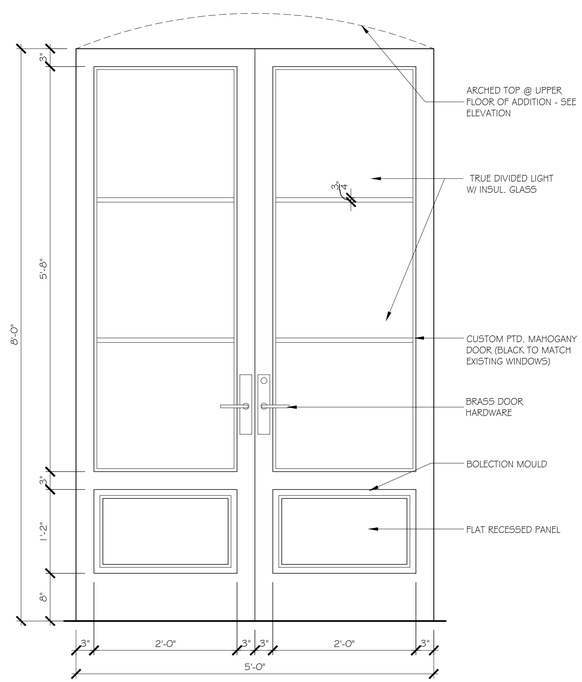

NEW FRENCH DOOR ELEVATION

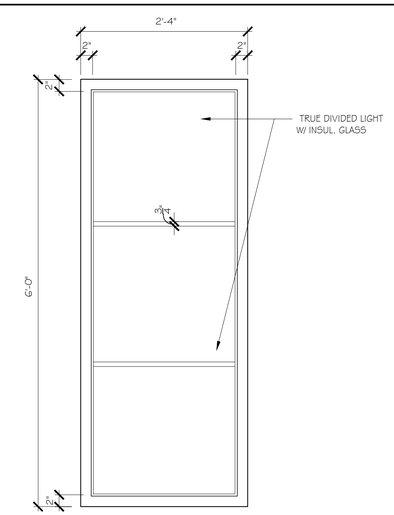

NEW CASEMENT WINDOW ELEVATION

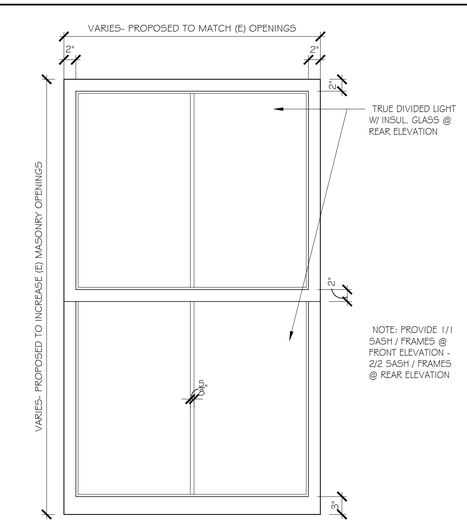

TYPICAL REPLACEMENT WINDOW ELEVATION

46 Waltham Street, Suite 3A
Boston, MA 02118
Phone 617-956-9992
Fax 917-956-9993

GD GRASSI DESIGN GROUP
BG BEAUCHEMIN GRASSI INTERIORS

JOB NO: 22 18
SCALE: 1/4"=1'-0"
DATE: 01/19/23
REVISED

358 MARLBOROUGH STREET
BOSTON, MA

EXTERIOR DETAILS AND DOOR & WINDOW TYPE ELEVATIONS