EVERSOURCE
ENERGY

NORTH WASHINGTON STREET BRIDGE
115-kV CABLE REPLACEMENT

BOSTON, MASSACHUSETTS

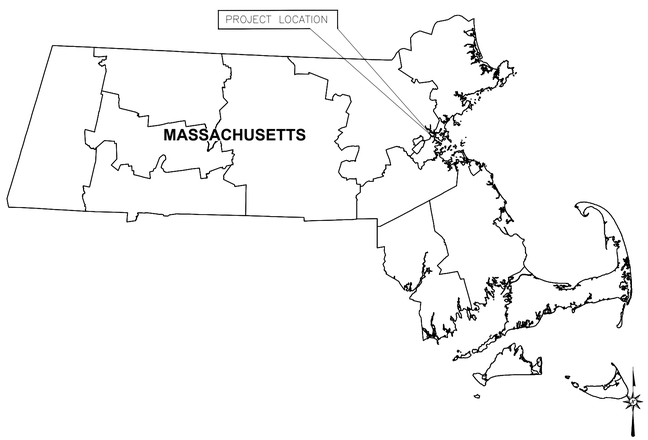

LOCATION MAP
N.T.S.

VICINITY MAP
N.T.S.

COMMONWEALTH OF MASSACHUSETTS
LANE PATRICK PULS
CIVIL
No. 48318
REGISTERED PROFESSIONAL ENGINEER
7-2-2021

UNDERGROUND TRANSMISSION LINE CONSTRUCTION CONTRACT DRAWINGS

JULY 2021

129460

REVISIONS DURING CONSTRUCTION					
0	07/2021	ISSUED FOR CONSTRUCTION	JAS	MJD	NDS

ISSUED FOR CONSTRUCTION

BURNS McDONNELL
9400 WARD PARKWAY
KANSAS CITY, MO 64114
816-333-9400
LICENSEE NO. 000165

\\bmcd\dfs\Clients\TND\NUSC\129460_NWashSTBridge\Design\Underground\CADD\Working\01_COVER_SHT.dwg 07-01-21 1:32 PM MSP B&McD

DRAWING LIST TABLE	
DRAWING NUMBER	DRAWING TITLE
00	COVER SHEET
PG01	GENERAL NOTES
PG02	SHEET LAYOUT AND PROJECT OVERVIEW
PG03	PLAN AND PROFILE
PG04	PLAN AND PROFILE
PG05	PLAN AND PROFILE
PG06	PLAN AND PROFILE
PG07	DUCT BANK SECTIONS 1 OF 2
PG08	DUCT BANK SECTIONS 2 OF 2
PG09	TYPICAL DUCT BANK DETAILS
PG10	NORTH VAULT CIRCUIT 250-517 DETAILS
PG11	NORTH VAULT CIRCUIT 250-516 DETAILS
PG12	SOUTH VAULT CIRCUIT 250-517 DETAILS
PG13	SOUTH VAULT CIRCUIT 250-516 DETAILS
PG14	TYPICAL VAULT DETAILS 1 OF 5
PG15	VAULT DETAILS NORTH CIRCUIT 250-517 2 OF 5
PG16	VAULT DETAILS NORTH CIRCUIT 250-516 3 OF 5
PG17	VAULT DETAILS SOUTH CIRCUIT 250-517 4 OF 5
PG18	VAULT DETAILS SOUTH CIRCUIT 250-516 5 OF 5
PG19	FREEZE PIT DETAILS
PG20	BONDING DIAGRAM
PG21	BRIDGE PLAN SHEET 1 OF 4
PG22	BRIDGE PLAN SHEET 2 OF 4
PG23	BRIDGE PLAN SHEET 3 OF 4
PG24	BRIDGE PLAN SHEET 4 OF 4
PG25	BRIDGE PROFILE SHEET
PG26	BRIDGE DETAIL SHEET 1 OF 5
PG27	BRIDGE DETAIL SHEET 2 OF 5
PG28	BRIDGE DETAIL SHEET 3 OF 5
PG29	BRIDGE DETAIL SHEET 4 OF 5
PG30	BRIDGE DETAIL SHEET 5 OF 5
PG31	REMOVAL PLAN

CURVE TABLE

CURVE NO.	RADIUS	CURVE LENGTH	TANGENT LENGTH	DEFLECTION ANGLE	POINT OF INTERSECTION	POINT OF CURVATURE	POINT OF TANGENCY
C1	60'	101.95'	68.24'	97.35	N 2,960,679.25, E 774,314.45	N 2,960,734.47, E 774,354.55	N 2,960,646.55, E 774,374.34
C2	100'	20.68'	10.38'	11.85	N 2,960,629.83, E 774,404.97	N 2,960,634.80, E 774,395.86	N 2,960,623.09, E 774,412.87
C3	100'	19.94'	10.00'	11.42	N 2,960,616.60, E 774,420.47	N 2,960,623.09, E 774,412.87	N 2,960,611.74, E 774,429.22
C4	40'	10.47'	5.27'	15.00	N 2,960,574.86, E 774,495.59	N 2,960,577.42, E 774,490.98	N 2,960,573.58, E 774,500.70
C5	40'	10.47'	5.27'	15.00	N 2,960,571.66, E 774,508.37	N 2,960,572.93, E 774,503.26	N 2,960,569.10, E 774,512.98
C6	50'	17.09'	8.63'	19.58	N 2,960,535.88, E 774,572.76	N 2,960,540.07, E 774,565.22	N 2,960,534.46, E 774,581.27
C7	50'	37.30'	19.57'	42.74	N 2,960,531.23, E 774,600.57	N 2,960,534.46, E 774,581.27	N 2,960,515.77, E 774,612.56
C8	50'	30.38'	15.67'	34.81	N 2,960,503.38, E 774,622.16	N 2,960,515.77, E 774,612.56	N 2,960,498.69, E 774,637.11
C9	50'	10.60'	5.32'	12.15	N 2,960,488.83, E 774,668.57	N 2,960,490.42, E 774,663.50	N 2,960,488.34, E 774,673.87
C10	50'	35.18'	18.35'	40.31	N 2,960,486.65, E 774,692.14	N 2,960,488.34, E 774,673.87	N 2,960,473.55, E 774,704.99
C11	25'	24.38'	13.26'	55.89	N 2,959,210.21, E 775,402.54	N 2,959,221.93, E 775,396.34	N 2,959,198.50, E 775,396.31
C12	30'	29.68'	16.18'	56.69	N 2,959,184.21, E 775,388.71	N 2,959,198.50, E 775,396.31	N 2,959,170.02, E 775,396.48
C13	100'	41.89'	21.26'	24.00	N 2,959,067.48, E 775,452.58	N 2,959,086.13, E 775,442.37	N 2,959,046.30, E 775,454.31
C14	30'	30.82'	16.93'	58.87	N 2,959,011.36, E 775,457.17	N 2,959,028.23, E 775,455.79	N 2,959,001.45, E 775,443.44
C15	50'	5.93'	2.97'	6.80	N 2,960,582.49, E 774,497.66	N 2,960,583.95, E 774,495.07	N 2,960,580.74, E 774,500.06
C16	50'	9.27'	4.65'	10.63	N 2,960,567.21, E 774,516.37	N 2,960,570.18, E 774,512.79	N 2,960,564.95, E 774,520.43
C17	50'	33.61'	17.47'	38.52	N 2,959,153.61, E 775,386.50	N 2,959,170.78, E 775,389.72	N 2,959,138.17, E 775,394.67

SURVEY INFORMATION:

1. EXISTING UTILITIES AND SITE FEATURES SHOWN ARE BASED ON SURVEY PROVIDED BY EVERSOURCE ON 12/16/2020 AND 1/19/2021. SURVEY WAS COMPLETED BY DGT ASSOCIATES SURVEYING & ENGINEERING, IN BOSTON MASSACHUSETTS, SUFFOLK COUNTY, BOSTON PROPER DISTRICT. PROJECT NO. S-1500.00
2. THE HORIZONTAL AND VERTICAL VALUES DEPICTED ARE BASED ON NAD83 MASSACHUSETTS STATE PLANE ZONE AND NAVD 1988 DATUMS.
3. CONTRACTOR TO FIELD VERIFY EXISTING CONDITIONS AND FIELD LOCATE EXISTING UTILITIES PRIOR TO INSTALLATION OF PROPOSED WORK.
4. QUALITY LEVEL A TEST PIT SURVEY INVESTIGATIONS AND RESULTS AS DEPICTED ON THESE DRAWINGS WERE COMPLETED BY SOFTDIG UNDERGROUND SERVICES, INC. QUALITY LEVEL A RESULTS WERE PROVIDED ON JUNE 28TH, 2021.

GENERAL NOTES:

1. VERTICAL RADII SHALL BE 200' UNLESS OTHERWISE NOTED. CONTRACTOR SHALL NOT DEVIATE FROM STATED RADII WITHOUT ENGINEER APPROVAL.
2. DUCT BANK SHALL MAINTAIN A TYPICAL COVER DEPTH OF 2'-6" UNLESS OTHERWISE SHOWN ON DRAWINGS. MAINTAIN 2'-0" TYPICAL VERTICAL CLEARANCE OVER OR UNDER EXISTING UTILITIES AND MAINTAIN 2'-0" TYPICAL HORIZONTAL CLEARANCE FOR ADJACENT EXISTING UTILITIES SHOWN ON DRAWINGS UNLESS OTHERWISE NOTED.
3. STATIONING INDICATED IS AT CENTERLINE OF DUCT BANK SECTIONS, EXCEPT FOR WAREHOUSE/BRIDGE ATTACHMENT SECTION. SEE BRIDGE DETAILS FOR LOCATION OF ALIGNMENT ON DUCT BANK SECTION.
4. CONTRACTOR SHALL PLUG CONDUIT SYSTEM WHEN WORK IS CEASED IN ACCORDANCE PER SPECIFICATIONS.
5. CONTRACTOR SHALL PERFORM ALL RESTORATION WORK AS REQUIRED IN ACCORDANCE WITH SPECIFICATIONS.
6. ANY DEVIATIONS FROM THE PROPOSED DUCT BANK ALIGNMENT AS SHOWN ON THE DRAWINGS SHALL REQUIRE APPROVAL FROM ENGINEER.
7. ALL CONSTRUCTION SHALL BE IN ACCORDANCE WITH THE PROJECT SPECIFICATIONS AND CONSTRUCTION DRAWINGS. ALL WORK SHALL BE DONE IN ACCORDANCE WITH ALL APPLICABLE CODES, REGULATIONS AND REQUIREMENTS.
8. ALL UNDERGROUND FACILITY ELEVATIONS & LOCATIONS SHOWN ON THE DRAWINGS ARE BASED ON THE BEST AVAILABLE INFORMATION AT THE TIME OF DESIGN. THE DEPTH OF THE UNDERGROUND UTILITIES SHOWN ON THE PROFILE OF THESE DRAWINGS ARE APPROXIMATE. THE CONTRACTOR SHALL BE RESPONSIBLE FOR DETERMINING THE ACTUAL ELEVATIONS AND LOCATIONS OF ALL UNDERGROUND FACILITIES PRIOR TO CONSTRUCTION. CONTRACTOR SHALL BE RESPONSIBLE FOR ANY DAMAGE TO SURFACE OR UNDERGROUND FACILITIES WETHER SHOWN OR NOT SHOWN ON THE DRAWINGS. CONTRACTOR SHALL HAVE THE LOCAL UTILITY LOCATING SERVICE LOCATE ALL FACILITIES BEFORE CONSTRUCTION. CALL BEFORE YOU DIG.
9. SPLICE VAULT MINIMUM DEPTH OF COVER, AS MEASURED AT ANY POINT OF BURIED SPLICE VAULTS, SHALL BE 2'-6" UNLESS OTHERWISE SHOWN ON DRAWINGS.
10. VAULT LOCATIONS ARE SUBJECT TO ADJUSTMENT DUE TO UNFORESEEN CONDITIONS, AND WILL REQUIRE APPROVAL FROM ENGINEER.
11. NORTHING AND EASTING DESIGNATIONS FOR SPLICE VAULT LOCATIONS ARE REFERENCED TO OUTSIDE CORNERS OF SPLICE VAULT, BASED ON AN ASSUMED WIDTH OF WALLS OF 1'-0".
12. ALL UTILITIES DENOTED WITH A "G" ARE GRAVITY FACILITIES WITH INTERPOLATED ELEVATIONS BASED ON SURVEY FIELD DATA. ALL OTHER UTILITIES ARE SHOWN AT DEPTHS NOTED IN GENERAL NOTES 14 AND 15.
13. EXISTING UTILITIES SHOWN IN PROFILE INCORPORATE RESULTS OF TEST PITS AND MAY DIFFER FROM PLAN VIEW SURVEY, WHICH IS BASED ON UTILITIES MARKED OUT ON GROUND PRIOR TO TEST PIT EXCAVATIONS. UTILITIES DENOTED WITH "(V)" IN PROFILE HAVE BEEN VERIFIED THROUGH TEST PITS, INVERT DEPTHS IN MANHOLES/CATCH BASINS OR RECORD/DESIGN DRAWINGS.
14. ASSUMED DEPTH OF GRAVITY FACILITIES WHERE INVERT INFORMATION WAS NOT AVAILABLE IS 3'-6".
15. ASSUMED DEPTH OF NON-GRAVITY UTILITIES ARE:
    WATER: 4'-6"
    GAS: 3'-0"
    ELECTRIC: 3'-0"
    TELECOMMUNICATIONS: 3'-0"
16. EXISTING HPFF TRANSMISSION PIPE SHALL BE DECOMMISSIONED. EXISTING PIPE AND HANGERS ATTACHED TO BRIDGES SHALL BE REMOVED. BURIED PIPE SHALL BE ABANDONED IN PLACE. CONTRACTOR TO SUBMIT PROCEDURE FOR DECOMMISSIONING AND REMOVAL WITH OWNER PRIOR TO CONSTRUCTION.
17. EXISTING UTILITY PIPE WALL THICKNESS SHOWN AS PROVIDED IN SURVEY. CONTRACTOR TO FIELD VERIFY PRIOR TO DUCT BANK PLACEMENT.

115kV CABLE PULLING CALCULATIONS

CABLE PULL						XLPE CABLE			PULLING TENSION (in lbf) FORWARD	SIDEWALL PRESSURE (in lbs/ft of radius) FORWARD	PULLING TENSION (in lbf) REVERSED	SIDEWALL PRESSURE (in lbs/ft of radius) REVERSED	APPROVED PULLING DIRECTION
FROM	TO	CIRCUIT	TYPICAL DUCT BANK CONDUIT SIZE AND TYPE	BRIDGE/WAREHOUSE CONDUIT SIZE AND TYPE	LENGTH OF RUN IN FEET	VOLTAGE CLASS	SIZE	TYPE					
SOUTH TRANSITION VAULT	NORTH TRANSITION VAULT	250-517	8" SCH40 PVC	8" EPOXY FIBERGLASS	2200	115kV	5000 KCMIL	XLPE	25983	671	18379	580	FORWARD AND REVERSE
SOUTH TRANSITION VAULT	NORTH TRANSITION VAULT	250-516	8" SCH40 PVC	8" EPOXY FIBERGLASS	1790	115kV	5000 KCMIL	XLPE	12556	284	9456	279	FORWARD AND REVERSE

MAXIMUM ALLOWABLE PULLING TENSIONS AND SIDEWALL PRESSURES IN ACCORDANCE WITH INDUSTRY STANDARD:
5000 kcmil Al XLPE 115kV, 1/C: MAX PULLING TENSION = 30,000 lbf, MAX SIDEWALL PRESSURE = APPROXIMATELY 1000 lbs/ft
COEFFICIENT OF FRICTION FOR PVC CONDUIT = 0.15
COEFFICIENT OF FRICTION FOR EPOXY FIBERGLASS CONDUIT = 0.25
* INDICATES CASES EXCEEDING MAXIMUM

LEGEND

- COMMUNICATIONS: CABLE TELEVISION, ALARM OR SIGNAL LINES
- DRAIN
- ELECTRIC: ELEC. POWER LINES, CABLES, CONDUIT & LIGHTING CABLES
- COMMUNICATIONS: FIBER OPTIC
- PRODUCT: GAS, OIL, STEAM, PETROLEUM OR GASEOUS MATERIALS
- SEWER
- COMMUNICATIONS: TELEPHONE
- UNVERIFIED / UNKNOWN UTILITY TYPE
- WATER: LOW PRESSURE, HIGH PRESSURE, FIRE SERVICE

FOR NOTES REGARDING UTILITY INVESTIGATION METHODS, FINDINGS AND LIMITATIONS SEE "NORTH WASHINGTON STREET SUBSURFACE UTILITY INVESTIGATION" PLANS BY DGT ASSOCIATES PROJECT NO. S-1500.00

COMMONWEALTH OF MASSACHUSETTS
LANE PATRICK PULS
CIVIL
No. 48318
REGISTERED PROFESSIONAL ENGINEER
7-2-2021

811 Know what's below. Call before you dig.

ISSUED FOR CONSTRUCTION

NO.	DATE	DESIGN REVISIONS	BY	CHK	APP	APP
0	07/02/21	ISSUED FOR CONSTRUCTION	JAS	MJD	-	-

BURNS McDONNELL
129460
date JAN. 22, 2021
detailed J. SCHATZ
designed M.DAGENAIS
checked N.SCOTT

NO.	DATE	AS BUILT REVISIONS	BY	CHK	APP	APP
–	–	–	–	–	–	–

EVERSOURCE ENERGY

TITLE: NORTH WASHINGTON STREET BRIDGE CABLE REPLACEMENT GENERAL NOTES
BOSTON, MASSACHUSETTS

BY J.SCHATZ – BMcD	CHKD M.DAGENAIS – BMcD	APP N.SCOTT – BMcD	APP –
DATE 1/22/21	DATE	DATE	DATE
H-SCALE N/A	SIZE D	FIELD BOOK & PAGES	
V-SCALE N/A	V.S.	R.E. DWG –	
R.E. PROJ. NUMBER		DWG NO. PG01	

0 50' 100' 200'
HORIZONTAL SCALE IN FEET

NORTH

811 Know what's below. Call before you dig.

COMMONWEALTH OF MASSACHUSETTS
LANE PATRICK PULS
CIVIL
No. 48318
REGISTERED PROFESSIONAL ENGINEER
7-2-2021

ISSUED FOR CONSTRUCTION

NO.	DATE	DESIGN REVISIONS	BY	CHK	APP	APP
0	07/02/21	ISSUED FOR CONSTRUCTION	JAS	MJD	-	-

BURNS McDONNELL

129460

date JAN. 22, 2021
detailed J. SCHATZ
designed M.DAGENAIS
checked N.SCOTT

NO.	DATE	AS BUILT REVISIONS	BY	CHK	APP	APP
–	–	–	–	–	–	–

EVERSOURCE
ENERGY

TITLE
NORTH WASHINGTON STREET
BRIDGE CABLE REPLACEMENT
SHEET LAYOUT AND PROJECT OVERVIEW
BOSTON, MASSACHUSETTS

BY J. SCHATZ – BMcD | CHKD M.DAGENAIS – BMcD | APP N.SCOTT – BMcD | APP –
DATE | DATE | DATE | DATE
H-SCALE 1" = 100' | V-SCALE N/A | SIZE D | D | V.S. | FIELD BOOK & PAGES | R.E. DWG
R.E. PROJ. NUMBER | NUSCO

PG02

NU_VER: BDR_VER

7/1/2021 1:30 PM – jaschatz – \\bmcd\dfs\Clients\TND\NUSC\129460_NWashSt\Bridge\Design\Underground\CADD\Working\Sheet Layout.dwg – Sheet Layout

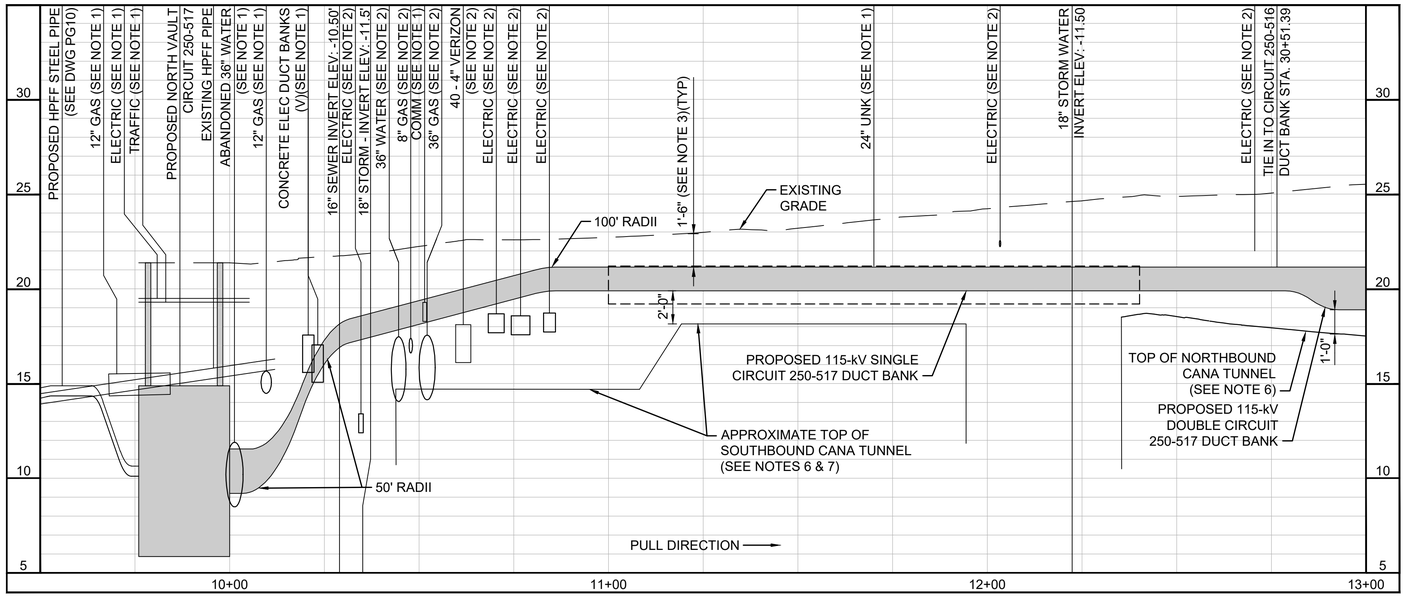

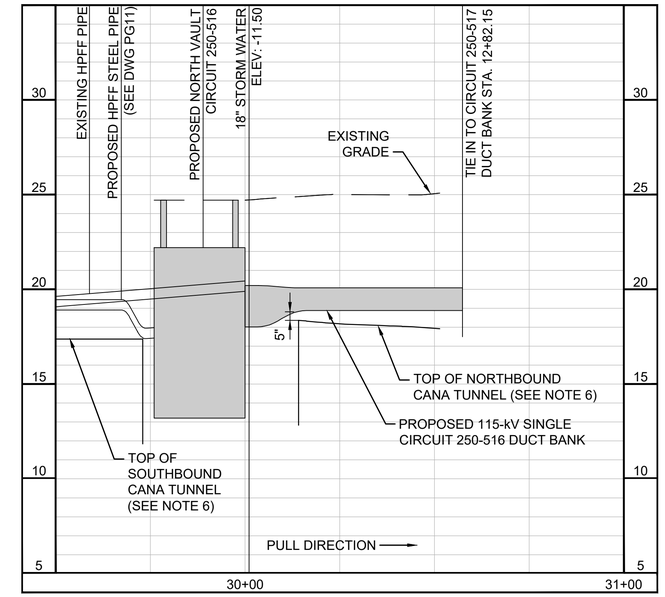

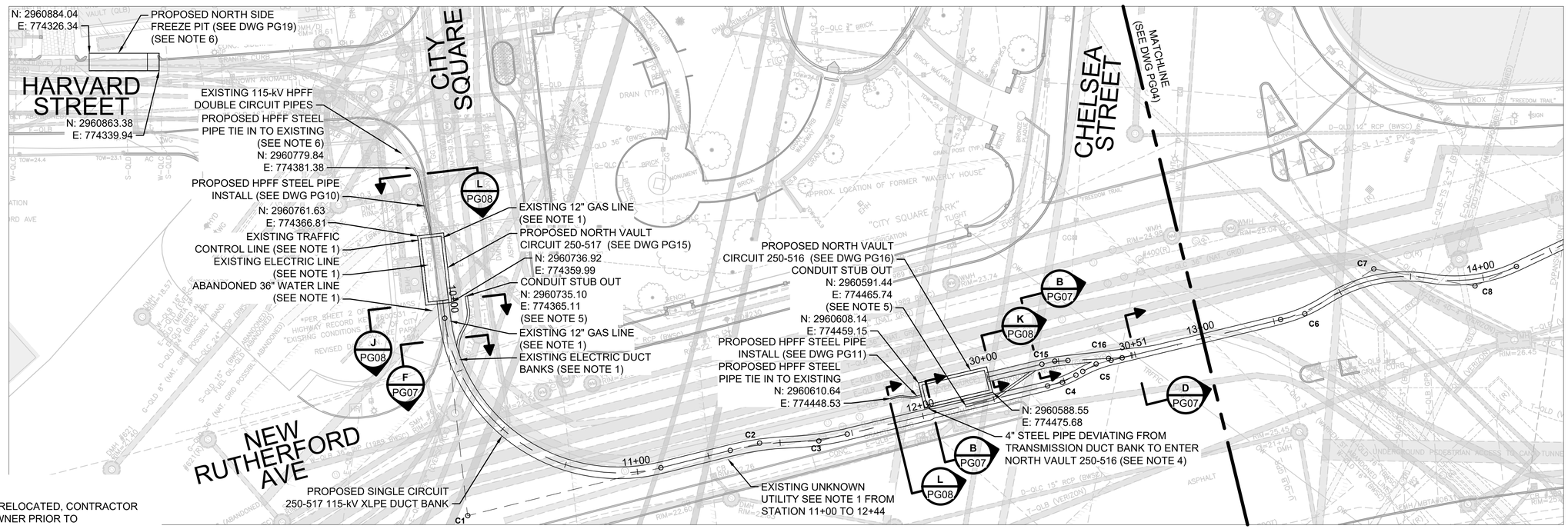

COMMONWEALTH OF MASSACHUSETTS
LANE PATRICK PULS
CIVIL
No. 48318
REGISTERED PROFESSIONAL ENGINEER

7-2-2021

STEEL PLATE INSTALLATION	
STATION START	STATION END
10+45	12+00

GENERAL NOTES:

1. UTILITY TO BE REMOVED OR RELOCATED, CONTRACTOR SHALL COORDINATE WITH OWNER PRIOR TO CONSTRUCTION.
2. 6" MINIMUM VERTICAL SEPARATION SHALL BE MAINTAINED FROM CROSSING UTILITIES.
3. WHERE DUCT BANK MINIMUM DEPTH OF COVER OF 30" CANNOT BE MAINTAINED, STEEL PLATING SHALL BE INSTALLED, SEE DETAIL 8 ON PG09.
4. CONTRACTOR SHALL INSTALL 4" STEEL PIPE FROM DUCT TO TRANSITION SPLICE VAULT. SEE SECTION H ON PG08 AND DETAIL 4 ON PG16.
5. CONTRACTOR SHALL STUB (2) 2" CONDUITS FOR FUTURE USE WITH MINIMUM 15' BENDS. REFER TO SECTION I ON PG08 AND DETAIL 3 ON PG09.
6. CONTRACTOR SHALL FIELD VERIFY LOCATION PRIOR TO START OF CONSTRUCTION.
7. TUNNEL EXTERIOR SHOWN BASED ON INTERPOLATED SURVEY DATA AS PROVIDED.

0 10' 20' 40'
HORIZONTAL SCALE IN FEET
0 4' 8'
VERTICAL SCALE IN FEET

NORTH

811 Know what's below. Call before you dig.

ISSUED FOR CONSTRUCTION

NO.	DATE	DESIGN REVISIONS	BY	CHK	APP	APP
0	07/02/21	ISSUED FOR CONSTRUCTION	JAS	MJD	-	-

BURNS McDONNELL

129460

date JAN. 22, 2021
detailed J. SCHATZ
designed M.DAGENAIS
checked N.SCOTT

NO.	DATE	AS BUILT REVISIONS	BY	CHK	APP	APP
–	–	–	–	–	–	–

EVERSOURCE ENERGY

TITLE
NORTH WASHINGTON STREET
BRIDGE CABLE REPLACEMENT
PLAN & PROFILE
BOSTON, MASSACHUSETTS

BY J. SCHATZ – BMcD | CHKD M.DAGENAIS – BMcD | APP N.SCOTT – BMcD | APP –
DATE | DATE | DATE | DATE
H-SCALE 1" = 20' | V-SCALE 1" = 4' | SIZE D D | FIELD BOOK & PAGES
V.S. | R.E. DWG
R.E. PROJ. NUMBER | NUSCO

PG03

STEEL PLATE INSTALLATION	
STATION START	STATION END
14+77	14+94.08

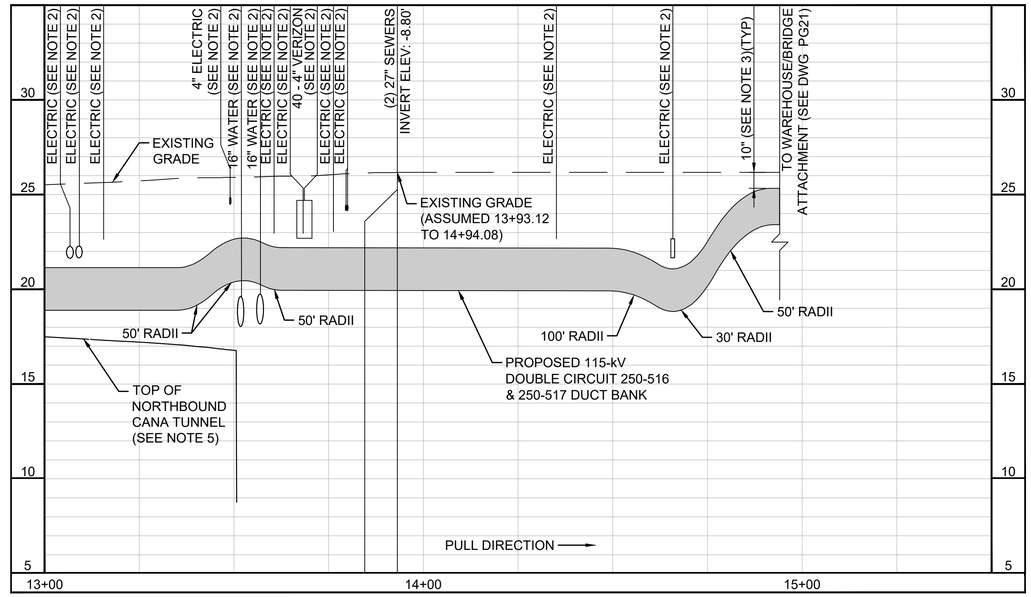

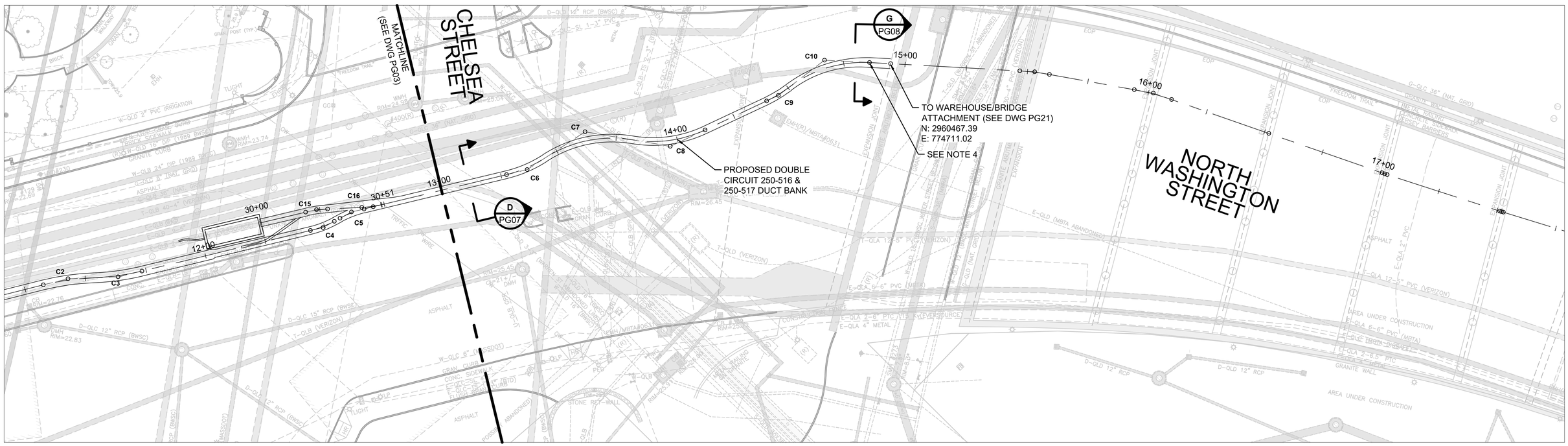

GENERAL NOTES:

1. UTILITY TO BE REMOVED OR RELOCATED, CONTRACTOR SHALL COORDINATE WITH OWNER PRIOR TO CONSTRUCTION.
2. 6" MINIMUM VERTICAL SEPARATION SHALL BE MAINTAINED FROM CROSSING UTILITIES.
3. WHERE DUCT BANK MINIMUM DEPTH OF COVER OF 30" CANNOT BE MAINTAINED, STEEL PLATING SHALL BE INSTALLED, SEE DETAIL 8 ON PG09.
4. CONTRACTOR TO INSTALL COUPLING TO TRANSITION FROM PVC TO FIBERGLASS CONDUIT A MINIMUM OF 2'-0" FROM ABUTEMENT WALL SEE DETAIL 4 ON PG09.
5. CONTRACTOR SHALL FIELD VERIFY LOCATION PRIOR TO START OF CONSTRUCTION.

0 10' 20' 40'
HORIZONTAL SCALE IN FEET

0 4' 8'
VERTICAL SCALE IN FEET

NORTH

811 Know what's below. Call before you dig.

ISSUED FOR CONSTRUCTION

NO.	DATE	DESIGN REVISIONS	BY	CHK	APP	APP
0	07/02/21	ISSUED FOR CONSTRUCTION	JAS	MJD	-	-

BURNS McDONNELL

129460

date JAN. 22, 2021
detailed J. SCHATZ
designed M.DAGENAIS
checked N.SCOTT

NO.	DATE	AS BUILT REVISIONS	BY	CHK	APP	APP
–	–	–	–	–	–	–

EVERSOURCE ENERGY

TITLE
NORTH WASHINGTON STREET
BRIDGE CABLE REPLACEMENT
PLAN & PROFILE
BOSTON, MASSACHUSETTS

BY J. SCHATZ – BMcD	CHKD M.DAGENAIS – BMcD	APP N.SCOTT – BMcD	APP –
DATE	DATE	DATE	DATE
H-SCALE 1" = 20'	SIZE D	D	FIELD BOOK & PAGES
V-SCALE 1" = 4'	V.S.		R.E. DWG
R.E. PROJ. NUMBER		NUSCO	

PG04

NU_VER: BDR_VER

7/2/2021 1:39 PM – jaschatz – \\bmcd\dfs\Clients\TND\NUSC\129460_NWashStBridge\Design\Underground\CADD\Working\PNP.dwg – North 2

COMMONWEALTH OF MASSACHUSETTS
LANE PATRICK PULS
CIVIL
No. 48318
REGISTERED PROFESSIONAL ENGINEER
7-2-2021

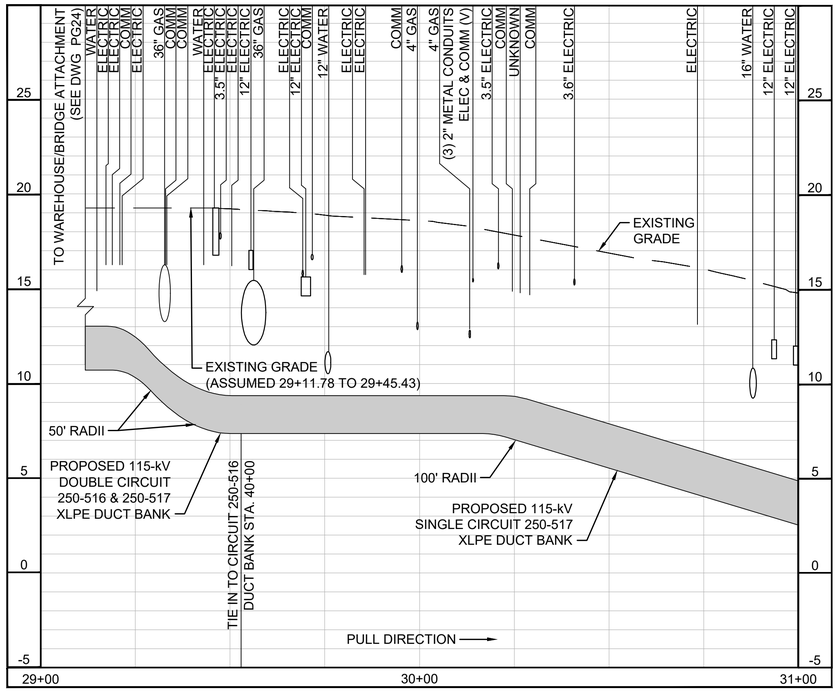

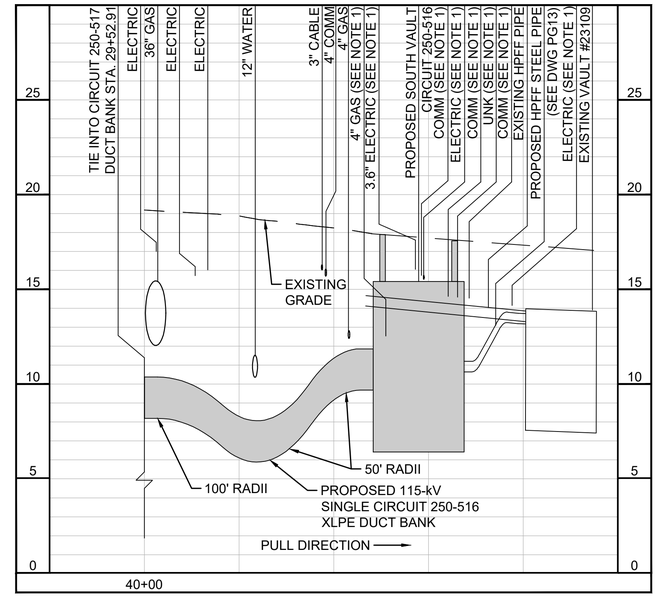

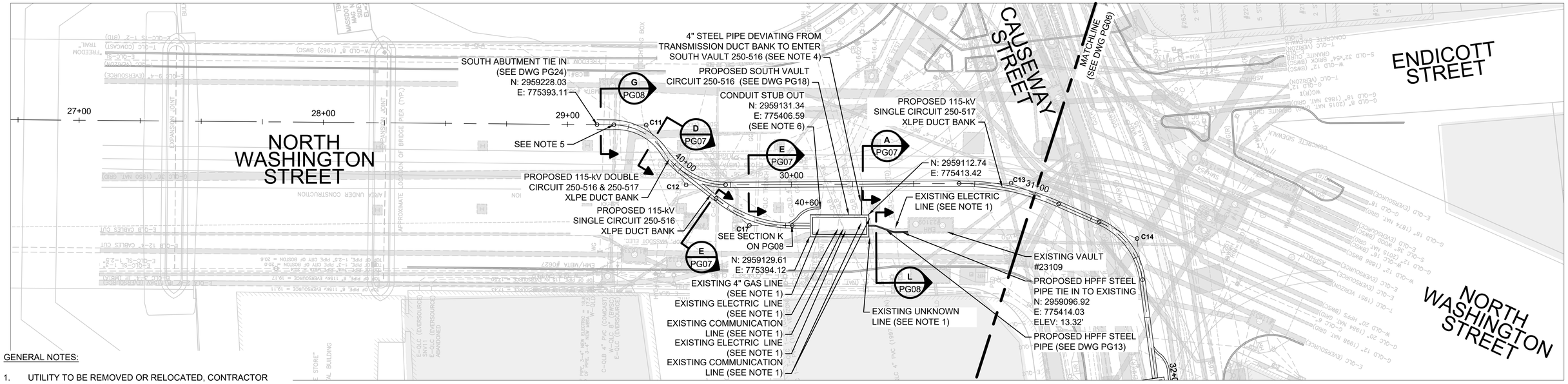

GENERAL NOTES:

1. UTILITY TO BE REMOVED OR RELOCATED, CONTRACTOR SHALL COORDINATE WITH OWNER PRIOR TO CONSTRUCTION.
2. 6" MINIMUM VERTICAL SEPARATION SHALL BE MAINTAINED FROM CROSSING UTILITIES.
3. WHERE A DUCT BANK MINIMUM DEPTH OF COVER OF 30" CANNOT BE MAINTAINED, STEEL PLATING SHALL BE INSTALLED, SEE DETAIL 8 ON PG09.
4. CONTRACTOR SHALL INSTALL 4" STEEL PIPE FROM DUCT TO TRANSITION SPLICE VAULT. SEE SECTION H ON PG08 AND DETAIL 4 ON PG18.
5. CONTRACTOR TO INSTALL COUPLING TO TRANSITION FROM PVC TO FIBERGLASS CONDUIT. A MINIMUM OF 2'-0" FROM ABUTMENT WALL, SEE DETAIL 3 AND 4 ON PG 09.
6. CONTRACTOR SHALL STUB (2) 2" CONDUITS FOR FUTURE USE WITH MINIMUM 15' BENDS. REFER TO SECTION I ON PG08.

0 10' 20' 40'
HORIZONTAL SCALE IN FEET
0 4' 8'
VERTICAL SCALE IN FEET
NORTH

811 Know what's below. Call before you dig.

ISSUED FOR CONSTRUCTION

NO.	DATE	DESIGN REVISIONS	BY	CHK	APP	APP
0	07/02/21	ISSUED FOR CONSTRUCTION	JAS	MJD	-	-

BURNS McDONNELL

129460

date JAN. 22, 2021
detailed J. SCHATZ
designed M.DAGENAIS
checked N.SCOTT

NO.	DATE	AS BUILT REVISIONS	BY	CHK	APP	APP
–	–	–	–	–	–	–

EVERSOURCE ENERGY

TITLE: NORTH WASHINGTON STREET BRIDGE CABLE REPLACEMENT PLAN & PROFILE
BOSTON, MASSACHUSETTS

BY J.SCHATZ – BMcD	CHKD M.DAGENAIS – BMcD	APP N.SCOTT – BMcD	APP –
DATE	DATE	DATE	DATE
H-SCALE 1" = 20' V-SCALE 1" = 4'	SIZE D D	FIELD BOOK & PAGES	
R.E. PROJ. NUMBER		V.S.	R.E. DWG
		NUSCO	PG05

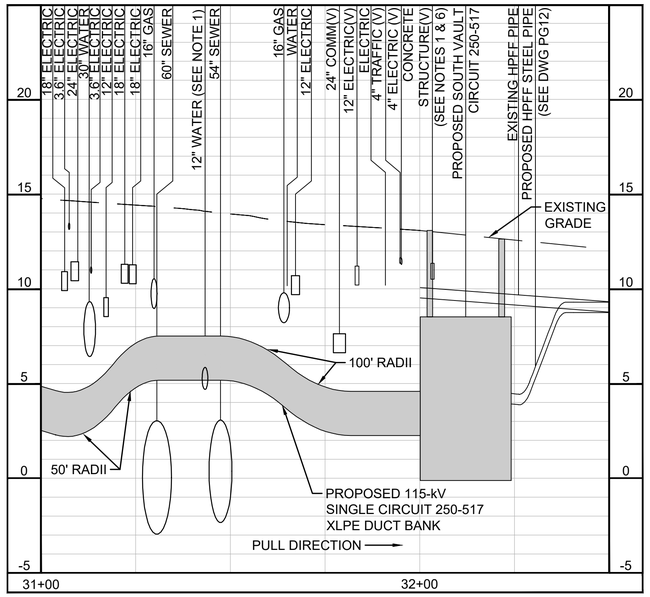

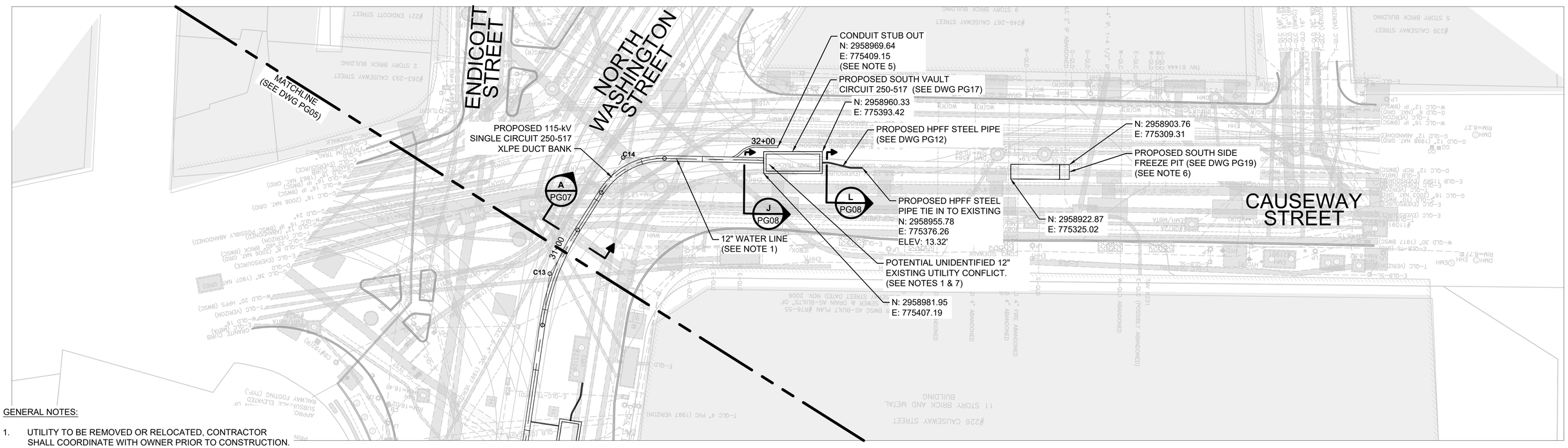

GENERAL NOTES:

1. UTILITY TO BE REMOVED OR RELOCATED, CONTRACTOR SHALL COORDINATE WITH OWNER PRIOR TO CONSTRUCTION.
2. 6" MINIMUM VERTICAL SEPARATION SHALL BE MAINTAINED FROM CROSSING UTILITIES.
3. WHERE A DUCT BANK MINIMUM DEPTH OF COVER OF 30" CANNOT BE MAINTAINED, STEEL PLATING SHALL BE INSTALLED, SEE DETAIL 8 ON PG09.
4. CONTRACTOR SHALL INSTALL 4" STEEL PIPE FROM DUCT TO TRANSITION SPLICE VAULT. SEE SECTION H ON PG08.
5. CONTRACTOR SHALL STUB (2) 2" CONDUITS FOR FUTURE USE WITH MINIMUM 15' BENDS. REFER TO SECTION I ON PG08 AND DETAIL 3 ON PG09.
6. CONTRACTOR SHALL FIELD VERIFY LOCATION PRIOR TO START OF CONSTRUCTION.
7. POTENTIAL UNIDENTIFIED EXISTING UTILITY CONFLICT. CONTRACTOR TO FIELD VERIFY LOCATION PRIOR TO TRENCHING ACTIVITIES.

0 10' 20' 40'
HORIZONTAL SCALE IN FEET

0 4' 8'
VERTICAL SCALE IN FEET

NORTH

811 Know what's below. Call before you dig.

ISSUED FOR CONSTRUCTION

NO.	DATE	DESIGN REVISIONS	BY	CHK	APP	APP
0	07/02/21	ISSUED FOR CONSTRUCTION	JAS	MJD	-	-

BURNS McDONNELL

129460

date JAN. 22, 2021
detailed J. SCHATZ
designed M.DAGENAIS
checked N.SCOTT

NO.	DATE	AS BUILT REVISIONS	BY	CHK	APP	APP
–	–	–	–	–	–	–

EVERSOURCE ENERGY

TITLE
NORTH WASHINGTON STREET
BRIDGE CABLE REPLACEMENT
PLAN & PROFILE
BOSTON, MASSACHUSETTS

BY J.SCHATZ – BMcD | CHKD M.DAGENAIS – BMcD | APP N.SCOTT – BMcD | APP –
DATE | DATE | DATE | DATE
H-SCALE 1" = 20' | V-SCALE 1" = 4' | SIZE D | FIELD BOOK & PAGES
V.S. | R.E. DWG
R.E. PROJ. NUMBER | NUSCO

PG06

NU VER: BDR_VER

7/2/2021 1:39 PM – jpschatz – \\bmcd\dfs\Clients\IND\NUSC\129460_WestSt\Bridge\Design\Underground\CADD\Working\PNP.dwg – South 2

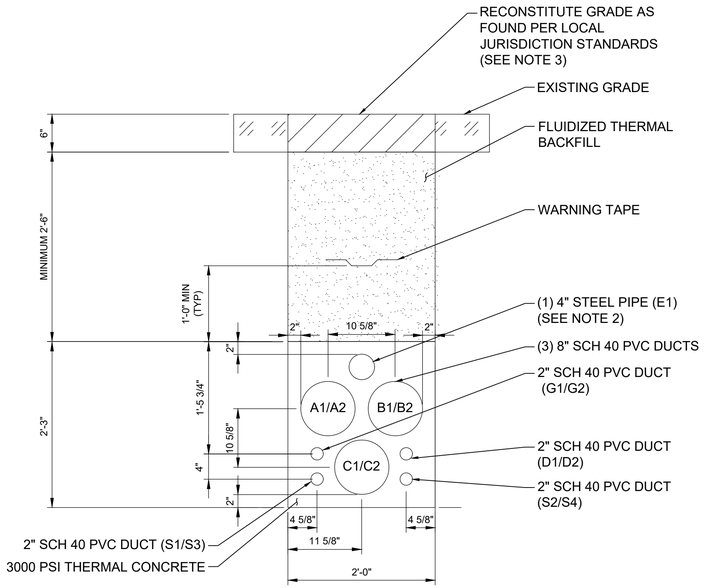

SINGLE CIRCUIT
DELTA DUCT BANK
WITH FLUID PIPE

SECTION A
NTS

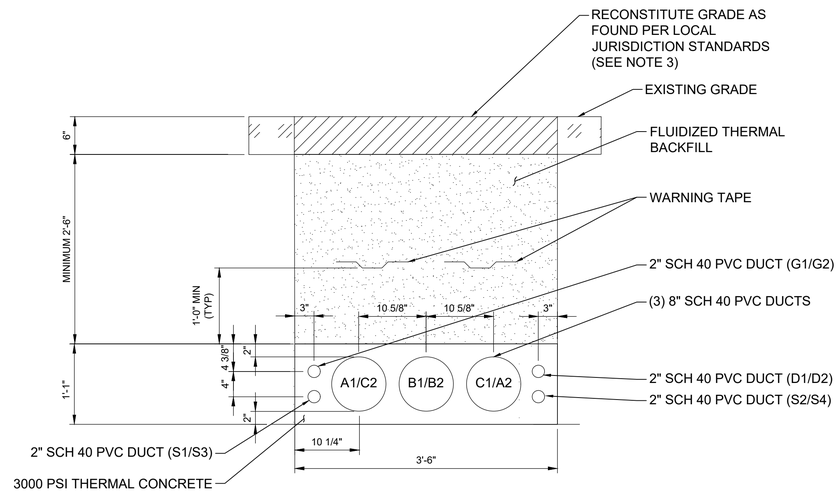

SINGLE CIRCUIT
FLAT DUCT BANK

SECTION B
NTS

NOT USED

SECTION C
NTS

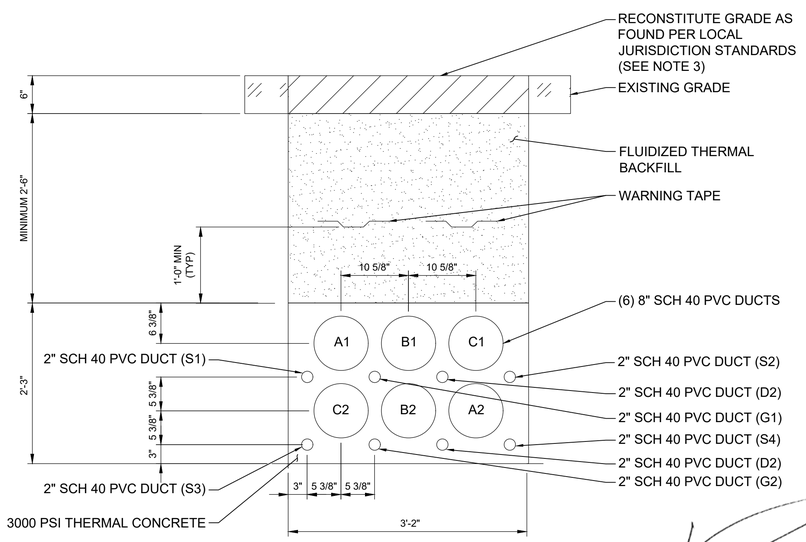

DOUBLE CIRCUIT
DUCT BANK

SECTION D
NTS

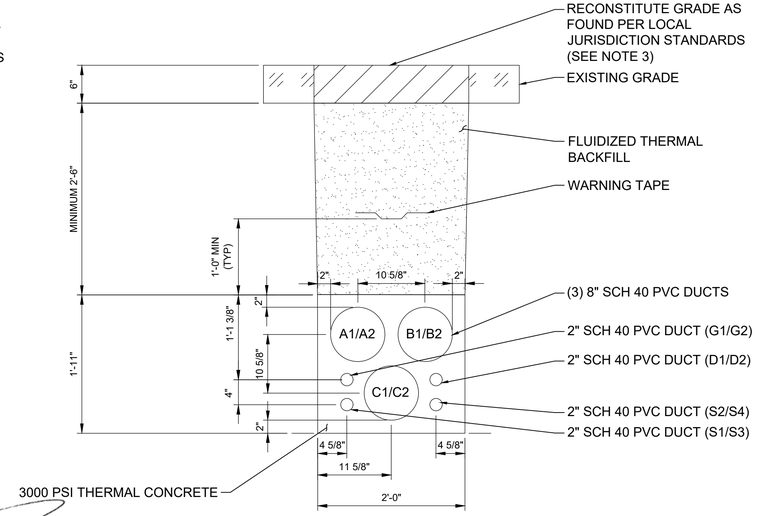

SINGLE CIRCUIT
DELTA DUCT BANK

SECTION E
NTS

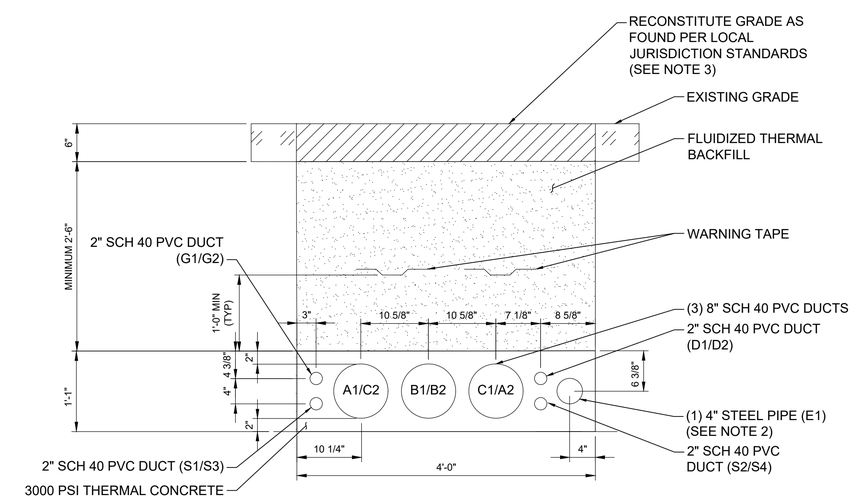

SINGLE CIRCUIT
FLAT DUCT BANK
WITH FLUID PIPE

SECTION F
NTS

GENERAL NOTES:

1. DUCT BANK OUTSIDE DIMENSIONS ROUNDED UP TO THE NEAREST INCH FOR CLARITY.
2. ALL CONNECTING PIPING SHALL BE SCHEDULE 80 ASTM A53 GRADE B OR ASTM A106 GRADE B CARBON STEEL.
3. ROAD AND SUBBASE THICKNESS TO BE FIELD VERIFIED ON PROJECT.
4. CONDUITS A1, B1, C1, G1, D1, S1, S2 ARE ASSOCIATED WITH CIRCUIT 250-517. CONDUITS A2, B2, C2, G2, D2, S3, S4 ARE ASSOCIATED WITH CIRCUIT 250-516.

COMMONWEALTH OF MASSACHUSETTS
LANE PATRICK PULS
CIVIL
No. 48318
REGISTERED PROFESSIONAL ENGINEER
7-2-2021

ISSUED FOR CONSTRUCTION

NO.	DATE	DESIGN REVISIONS	BY	CHK	APP	APP
0	07/02/21	ISSUED FOR CONSTRUCTION	JAS	MJD	-	-

BURNS McDONNELL

129460

date JAN. 22, 2021
detailed J. SCHATZ
designed M.DAGENAIS
checked N.SCOTT

NO.	DATE	AS BUILT REVISIONS	BY	CHK	APP	APP
–	–	–	–	–	–	–

EVERSOURCE ENERGY

TITLE
NORTH WASHINGTON STREET
BRIDGE CABLE REPLACEMENT
DUCT BANK SECTIONS 1 OF 2
BOSTON, MASSACHUSETTS

BY J.SCHATZ – BMcD | CHKD M.DAGENAIS – BMcD | APP N.SCOTT – BMcD | APP (BMcD)
DATE 01/22/21 | DATE | DATE | DATE
H-SCALE N/A | V-SCALE N/A | SIZE D | V.S. | FIELD BOOK & PAGES | R.E. DWG
R.E. PROJ. NUMBER 129460 | MUSCO

PG07

NU_VER: BDR_VER

7/2/2021 1:38 PM – jpschatz – \\bmcd\dfs\Clients\TND\MUSC\129460_NWashInSBridge\Design\Underground\C400\Working\05_Sections.dwg – PG001

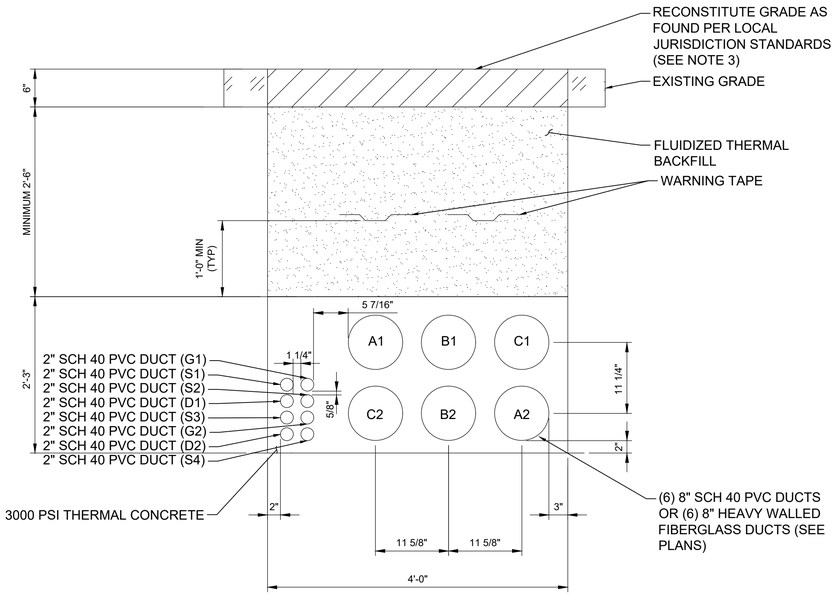

DOUBLE CIRCUIT
BRIDGE/WAREHOUSE CROSSING

SECTION G
NTS -

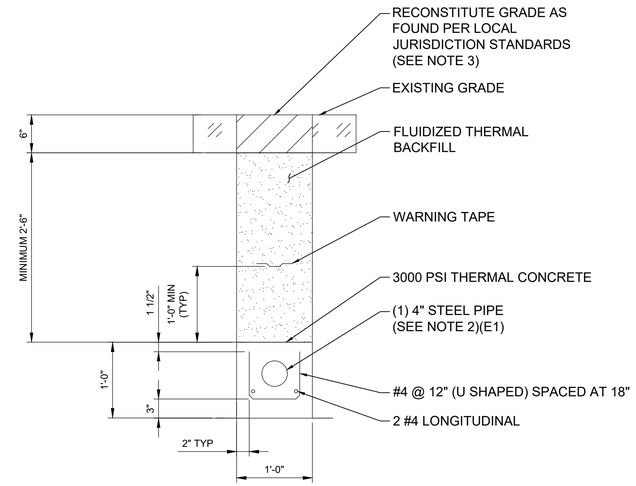

4" STEEL FLUID LINE

SECTION H
NTS -

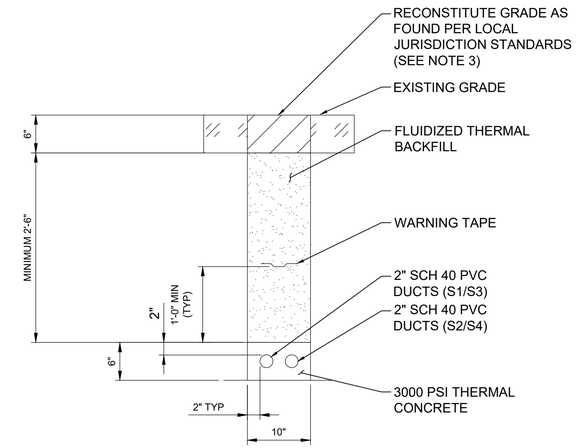

FIBER CONDUIT

SECTION I
NTS -

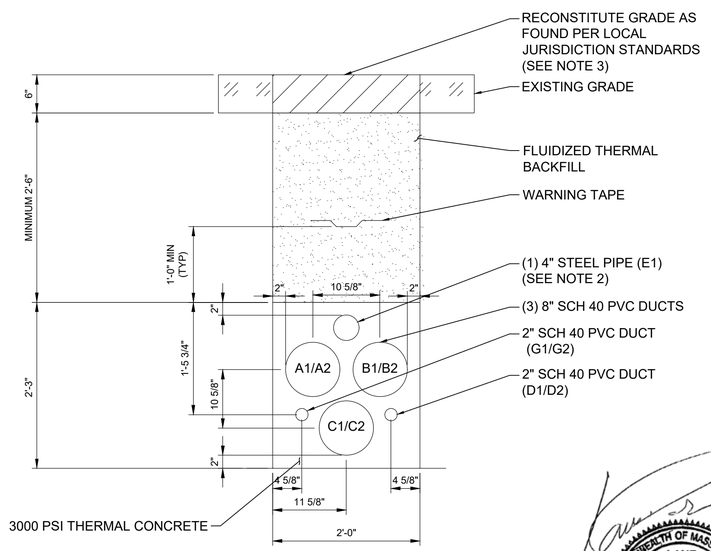

SINGLE CIRCUIT
DELTA DUCT BANK
WITH FLUID PIPE

SECTION J
NTS -

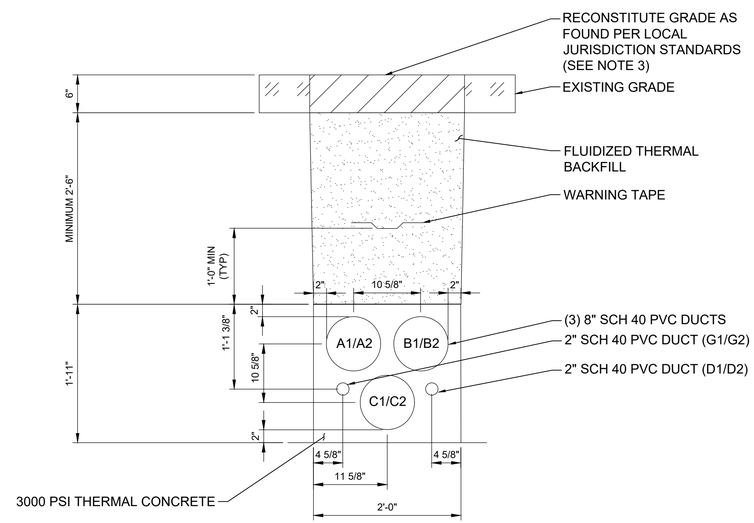

SINGLE CIRCUIT
DELTA DUCT BANK

SECTION K
NTS -

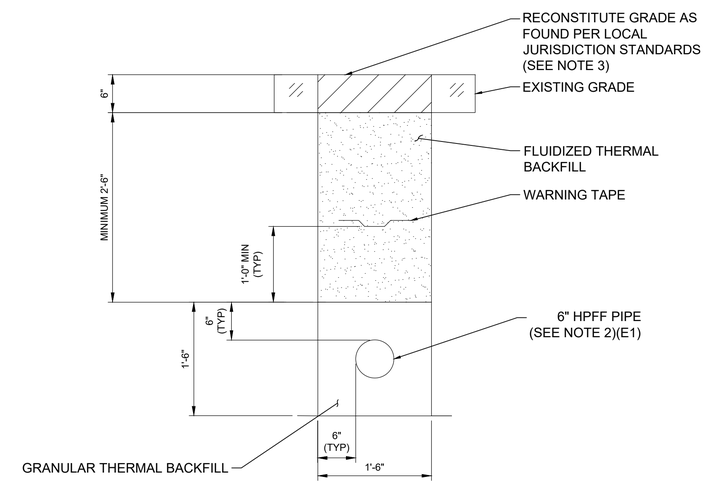

SINGLE CIRCUIT
HPFF STEEL PIPE

SECTION L
NTS -

GENERAL NOTES:

1. DUCT BANK OUTSIDE DIMENSIONS ROUNDED UP TO THE NEAREST INCH FOR CLARITY.
2. ALL CONNECTING PIPING SHALL BE SCHEDULE 80 ASTM A53 GRADE B OR ASTM A106 GRADE B CARBON STEEL.
3. ROAD AND SUBBASE THICKNESS TO BE FIELD VERIFIED ON PROJECT.
4. CONDUITS A1, B1, C1, G1, D1, S1, S2 ARE ASSOCIATED WITH CIRCUIT 250-517. CONDUITS A2, B2, C2, G2, D2, S3, S4 ARE ASSOCIATED WITH CIRCUIT 250-516.

COMMONWEALTH OF MASSACHUSETTS
LANE PATRICK PULS
CIVIL
No. 48318
REGISTERED PROFESSIONAL ENGINEER
7-2-2021

ISSUED FOR CONSTRUCTION

NO.	DATE	DESIGN REVISIONS	BY	CHK	APP	APP
0	07/02/21	ISSUED FOR CONSTRUCTION	JAS	MJD	-	-

BURNS McDONNELL

129460

date JAN. 22, 2021
detailed J. SCHATZ
designed M.DAGENAIS
checked N.SCOTT

NO.	DATE	AS BUILT REVISIONS	BY	CHK	APP	APP
–	–	–	–	–	–	–

EVERSOURCE ENERGY

TITLE
NORTH WASHINGTON STREET
BRIDGE CABLE REPLACEMENT
DUCT BANK SECTIONS 2 OF 2
BOSTON, MASSACHUSETTS

BY J.SCHATZ – BMcD | CHKD M.DAGENAIS – BMcD | APP N.SCOTT – BMcD | APP (BMcD)
DATE 01/22/21 | DATE | DATE | DATE
H-SCALE N/A | V-SCALE N/A | SIZE D | V.S. | FIELD BOOK & PAGES | R.E. DWG
R.E. PROJ. NUMBER 129460 | NUSCO PG08

NU VER: BDR_VER

7/2/2021 1:38 PM – jpschatz – \\bmcd\dfs\Clients\IND\NUSC\129460_WHashSt\Bridge\Design\Underground\CADD\Working\05_Sections.dwg – PG001 (2)

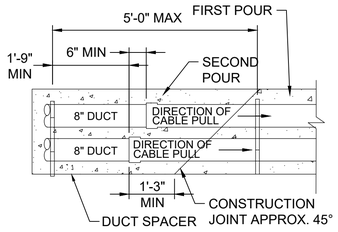

CONSTRUCTION JOINT DETAIL

DETAIL 1
NTS -

NOTE:

1. 2" AND 4" DUCTS NOT SHOWN FOR CLARITY.

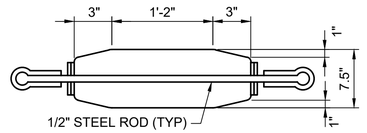

TYPICAL MANDREL DETAIL

DETAIL 2
NTS -

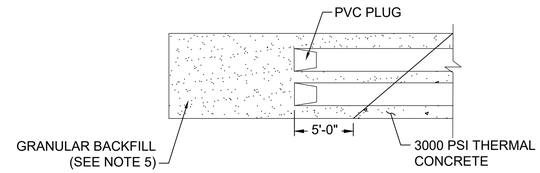

TEMPORARY CONDUIT STUB OUT DETAILS

DETAIL 3
NTS -

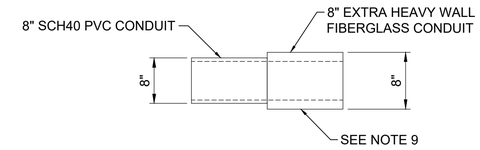

REDUCING ADAPTER

DETAIL 4
NTS -

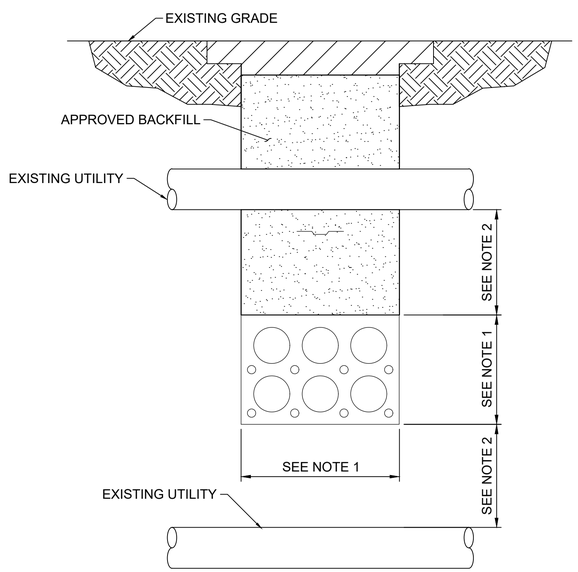

TYPICAL DUCT BANK WITH UTILITY CLEARANCE

DETAIL 5
NTS -

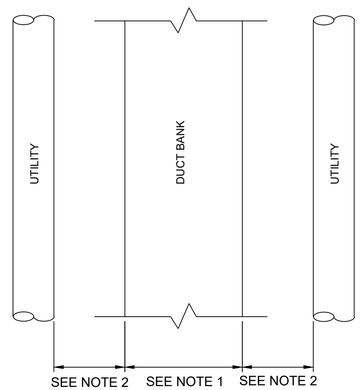

TYPICAL HORIZONTAL UTILITY CLEARANCE DETAIL

DETAIL 6
NTS -

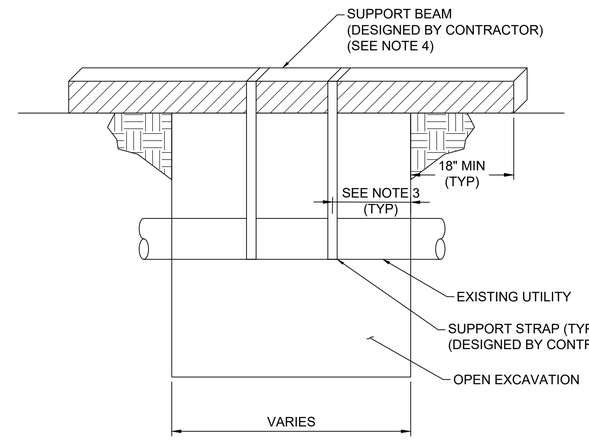

TYPICAL PIPE SUPPORT ACROSS OPEN EXCAVATION

DETAIL 7
NTS -

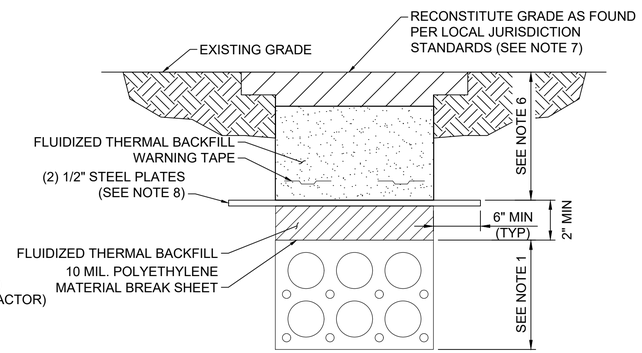

TYPICAL STEEL PLATING

DETAIL 8
NTS -

GENERAL NOTES:

1. SEE DRAWING PG07 AND PG08 FOR CONDUIT SECTION.
2. 2'-0" MIN. CLEARANCE MAINTAINED UNLESS OTHERWISE NOTED ON PLAN AND PROFILE.
3. 2'-0" MAX SPAN, OR DIRECTED BY THE UTILITY WHICHEVER IS LESS.
4. CONTRACTOR SHALL SUBMIT METHOD OF SUPPORT TO RESPECTIVE UTILITY OWNERS FOR APPROVAL PRIOR TO CONSTRUCTION.
5. PROVIDE A MINIMUM OF 3'-0" OF THERMAL BACKFILL AROUND ALL SIDES OF CONDUITS.
6. WHERE A MINIMUM DEPTH OF COVER OF 30" CANNOT BE MAINTAINED, STEEL PLATTING SHALL BE REQUIRED.
7. ROAD AND SUBBASE THICKNESS TO BE FIELD VERIFIED ON PROJECT.
8. STEEL PLATES TO BE PLACED ON TOP OF EACH OTHER WITH NO TWO JOINTS OVERLAPPED. STEEL PLATE SHALL OVERHANG ENCASEMENT BY NO LESS THAN 6" ON EACH SIDE.
9. REDUCING ADAPTER AS PROPOSED BY CONTRACTOR FOR REVIEW AND APPROVAL BY OWNER (DIMENSIONS SHOWN ARE NOMINAL).

COMMONWEALTH OF MASSACHUSETTS
LANE PATRICK PULS
CIVIL
No. 48318
REGISTERED PROFESSIONAL ENGINEER
7-2-2021

ISSUED FOR CONSTRUCTION

NO.	DATE	DESIGN REVISIONS	BY	CHK	APP	APP
0	07/02/21	ISSUED FOR CONSTRUCTION	JAS	MJD	-	-

BURNS McDONNELL

129460

date JAN. 22, 2021
detailed J. SCHATZ
designed J. SCHATZ
checked CHECKER

NO.	DATE	AS BUILT REVISIONS	BY	CHK	APP	APP
–	–	–	–	–	–	–

EVERSOURCE ENERGY

TITLE: NORTH WASHINGTON STREET BRIDGE CABLE REPLACEMENT
TYPICAL DUCT BANK DETAILS
BOSTON, MASSACHUSETTS

BY J.SCHATZ – BMcD	CHKD M.DAGENAIS – BMcD	APP N.SCOTT – BMcD	APP (BMcD)
DATE 01/22/21	DATE	DATE	DATE
H-SCALE N/A	SIZE D	D	FIELD BOOK & PAGES
V-SCALE N/A	V.S.		R.E. DWG
R.E. PROJ. NUMBER	129460		NUSCO

PG09

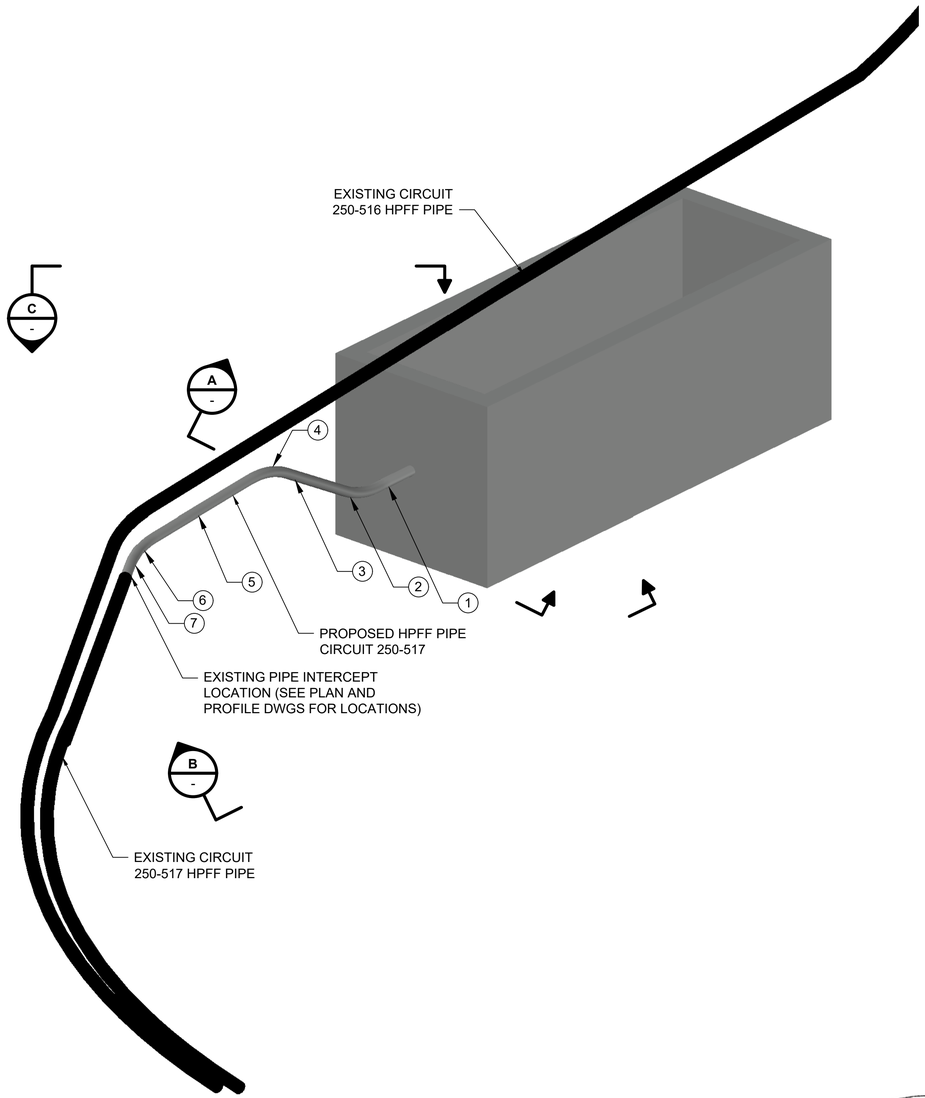

ISOMETRIC VIEW

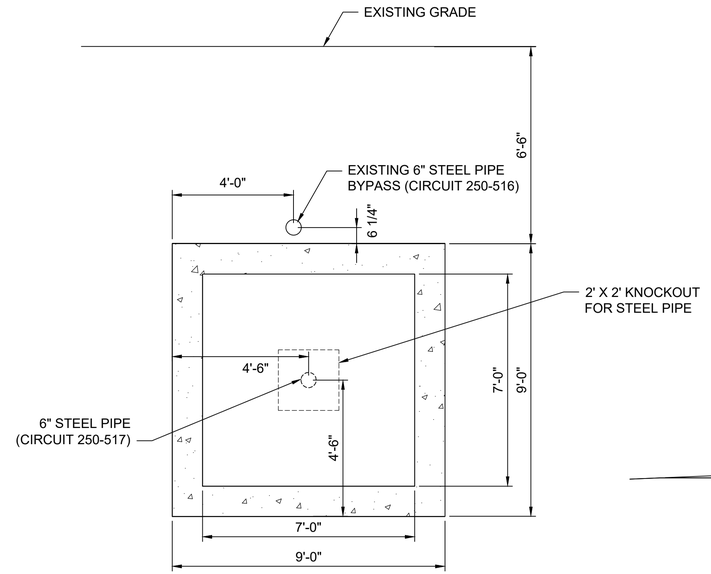

TRANSITION VAULT CIRCUIT 250-517
NORTH HPFF END WALL

SECTION A -

SEGMENTS	LENGTH (FT)	RADIUS (FT)	ANGLE (DEG)	ROTATION (DEG)
1	2.00			
2		6	30	5.88
3	5.31			
4		6	30	0
5	7.57			
6		6	25	2.36
7	1.00			

TRANSITION PIPE SEGMENT TABLE

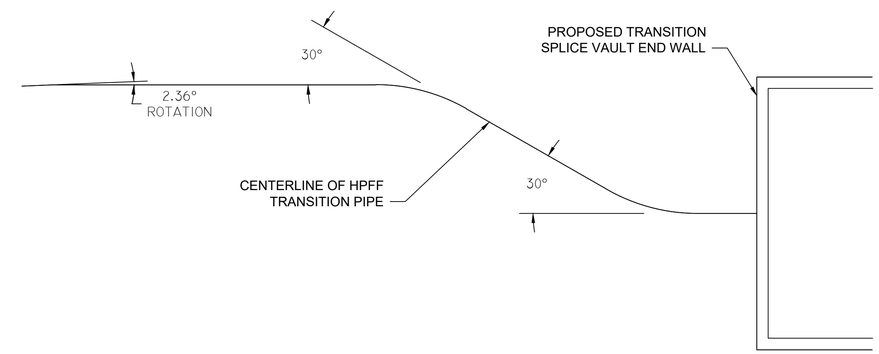

TRANSITION PIPE PROFILE VIEW

SECTION B -

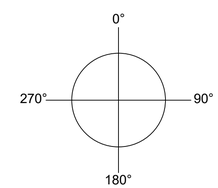

ANGLE TO BE MEASURED PLUMB FROM
VAULT FACE LOOKING TOWARDS
TRANSITION PIPE TIE-IN LOCATION

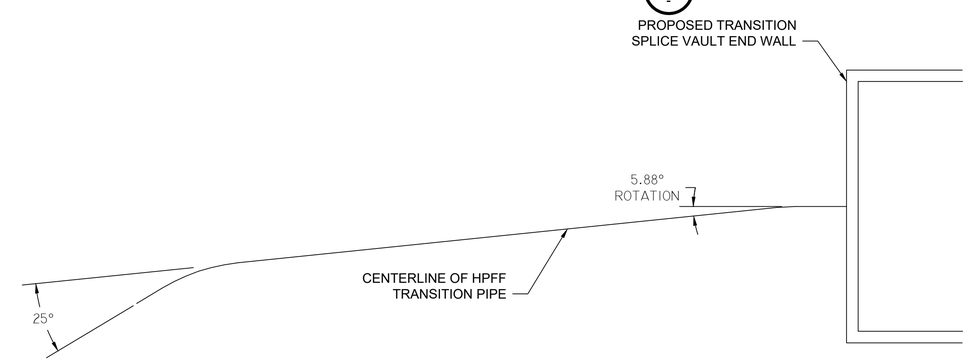

TRANSITION PIPE PLAN VIEW

SECTION C -

NOTE:

1. SPLICE VAULTS AS SHOWN BASED ON AN ASSUMED WALL THICKNESS OF 1'-0". CONTRACTOR RESPONSIBLE FOR FINAL DESIGN OF CAST-IN PLACE VAULT.
2. CONTRACTOR TO FIELD VERIFY EXISTING PIPE TIE IN LOCATIONS PRIOR TO CONSTRUCTION.

COMMONWEALTH OF MASSACHUSETTS
LANE PATRICK PULS
CIVIL
No. 48318
REGISTERED PROFESSIONAL ENGINEER
7-2-2021

ISSUED FOR CONSTRUCTION

NO.	DATE	DESIGN REVISIONS	BY	CHK	APP	APP
0	07/02/21	ISSUED FOR CONSTRUCTION	JAS	MJD	-	-

BURNS McDONNELL

129460

date JAN. 22, 2021
detailed J. SCHATZ
designed J. SCHATZ
checked CHECKER

NO.	DATE	AS BUILT REVISIONS	BY	CHK	APP	APP
–	–	–	–	–	–	–

EVERSOURCE ENERGY

TITLE: NORTH WASHINGTON STREET
BRIDGE CABLE REPLACEMENT
NORTH VAULT CIRCUIT 250–517 DETAIL
BOSTON, MASSACHUSETTS

BY	CHKD	APP
J.SCHATZ – BMcD	M.DAGENAIS – BMcD	N.SCOTT – BMcD (BMcD)
DATE 02/09/21	DATE	DATE / DATE

H-SCALE N/A; V-SCALE N/A; SIZE D; D; V.S.; FIELD BOOK & PAGES; R.E. DWG; R.E. PROJ. NUMBER 129460; NUSCO

PG10

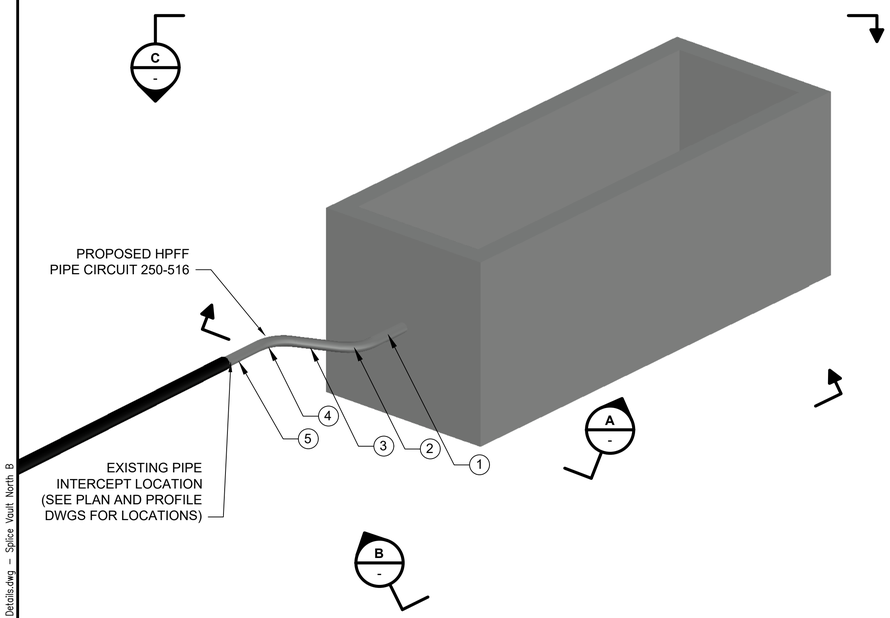

ISOMETRIC VIEW

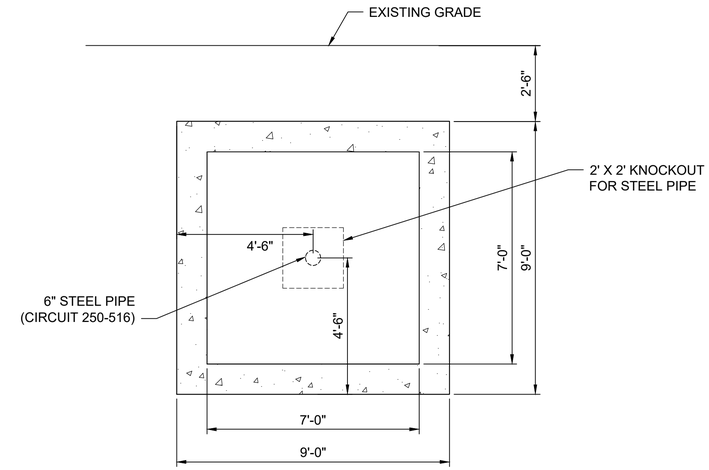

TRANSITION VAULT CIRCUIT 250-516
NORTH HPFF END WALL

SECTION A -

SEGMENTS	LENGTH (FT)	RADIUS (FT)	ANGLE (DEG)	ROTATION (DEG)
1	2.00			
2		6	20	20
3	2.22			
4		6	21	20
5	2.00			

TRANSITION PIPE SEGMENT TABLE

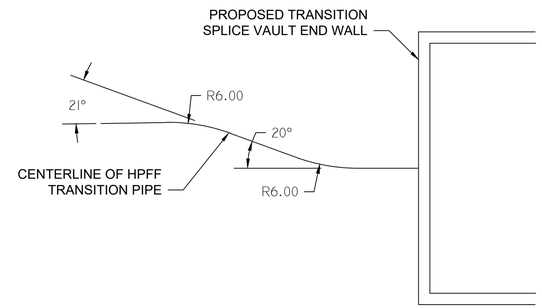

TRANSITION PIPE PROFILE VIEW

SECTION B -

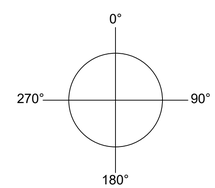

ANGLE TO BE MEASURED PLUMB FROM
VAULT FACE LOOKING TOWARDS
TRANSITION PIPE TIE-IN LOCATION

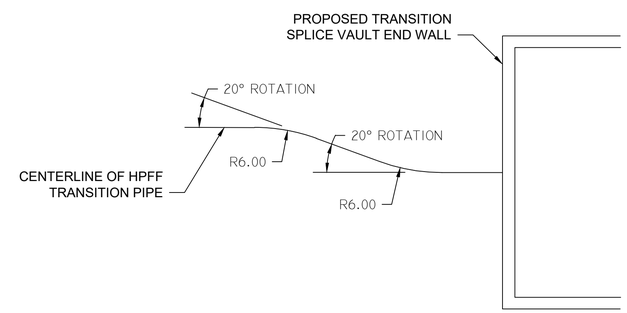

TRANSITION PIPE PLAN VIEW

SECTION C -

NOTE:

1. SPLICE VAULTS AS SHOWN BASED ON AN ASSUMED WALL THICKNESS OF 1'-0". CONTRACTOR RESPONSIBLE FOR FINAL DESIGN OF CAST-IN PLACE VAULT.
2. CONTRACTOR TO FIELD VERIFY EXISTING PIPE TIE IN LOCATIONS PRIOR TO CONSTRUCTION.

COMMONWEALTH OF MASSACHUSETTS
LANE PATRICK PULS
CIVIL
No. 48318
REGISTERED PROFESSIONAL ENGINEER
7-2-2021

ISSUED FOR CONSTRUCTION

NO.	DATE	DESIGN REVISIONS	BY	CHK	APP	APP
0	07/02/21	ISSUED FOR CONSTRUCTION	JAS	MJD	-	-

BURNS McDONNELL

129460

date JAN. 22, 2021
detailed J. SCHATZ
designed J. SCHATZ
checked CHECKER

NO.	DATE	AS BUILT REVISIONS	BY	CHK	APP	APP
–	–	–	–	–	–	–

EVERSOURCE ENERGY

TITLE
NORTH WASHINGTON STREET
BRIDGE CABLE REPLACEMENT
NORTH VAULT CIRCUIT 250–516 DETAIL
BOSTON, MASSACHUSETTS

BY J.SCHATZ – BMcD | CHKD M.DAGENAIS – BMcD | APP N.SCOTT – BMcD | APP (BMcD)
DATE 02/09/21 | DATE | DATE | DATE
H-SCALE N/A | V-SCALE N/A | SIZE D | D | FIELD BOOK & PAGES
V.S. | R.E. DWG
R.E. PROJ. NUMBER 129460 | NUSCO PG11

7/2/2021 1:38 PM – jaschatz – \\bmcd\dfs\Clients\TND\NUSC\129460_NWashSt\Bridge\Design\Underground\CADD\Working\Splice Vault Details.dwg – Splice Vault North B

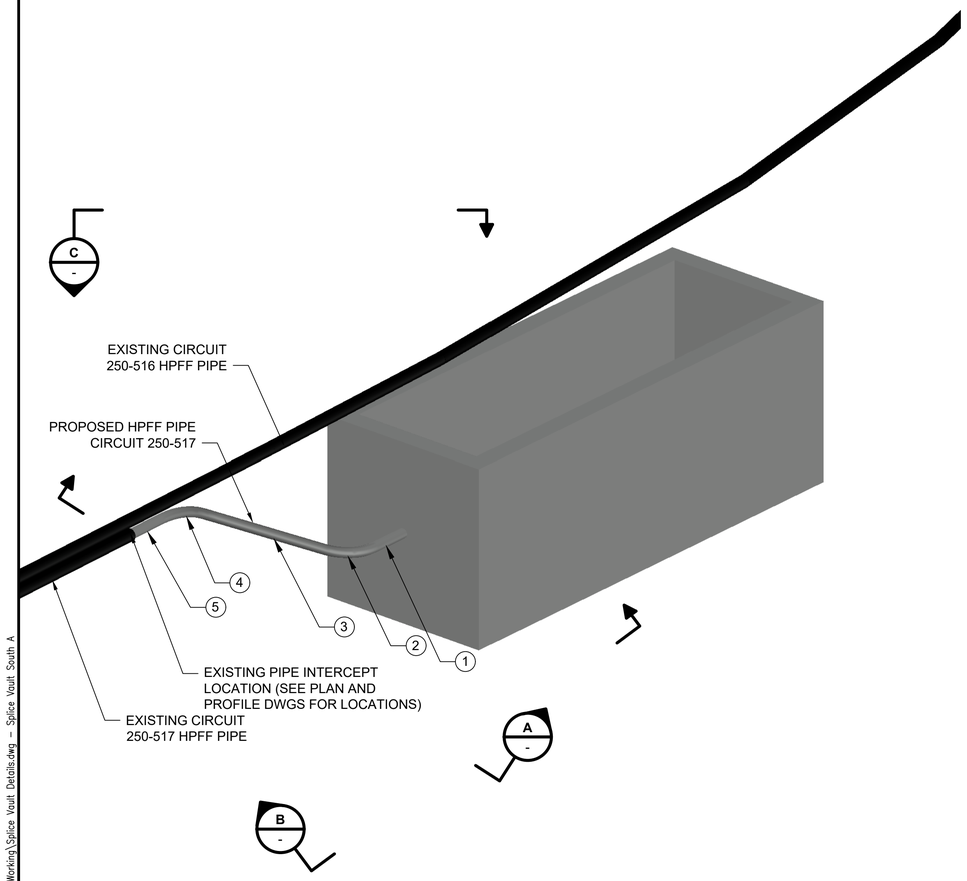

ISOMETRIC VIEW

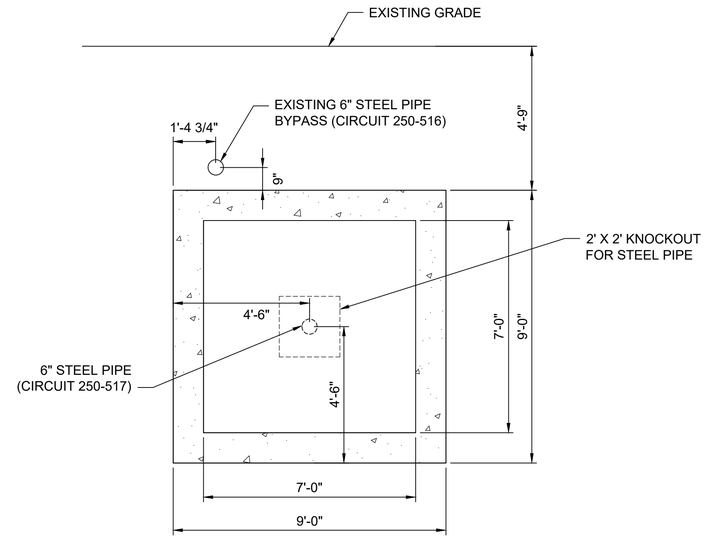

TRANSITION VAULT CIRCUIT 250-517
SOUTH HPFF END WALL

SECTION A -

SEGMENTS	LENGTH (FT)	RADIUS (FT)	ANGLE (DEG)	ROTATION (DEG)
1	2.00			
2		6	29	14
3	6.85			
4		6	30	13
5	2.00			

TRANSITION PIPE SEGMENT TABLE

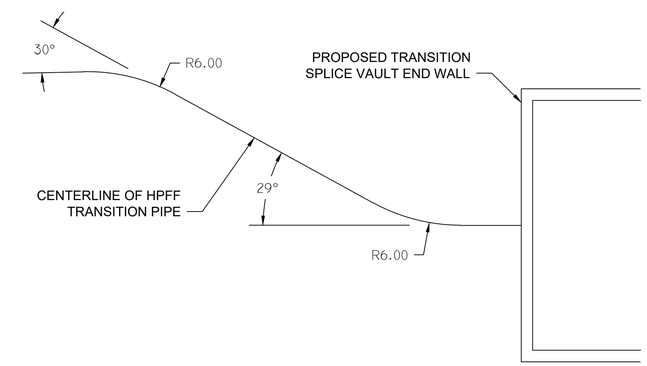

TRANSITION PIPE PROFILE VIEW

SECTION B -

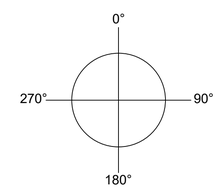

ANGLE TO BE MEASURED PLUMB FROM
VAULT FACE LOOKING TOWARDS
TRANSITION PIPE TIE-IN LOCATION

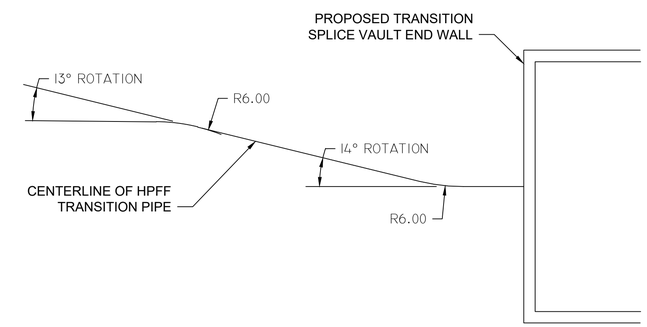

TRANSITION PIPE PLAN VIEW

SECTION C -

NOTE:

1. SPLICE VAULTS AS SHOWN BASED ON AN ASSUMED WALL THICKNESS OF 1'-0". CONTRACTOR RESPONSIBLE FOR FINAL DESIGN OF CAST-IN PLACE VAULT.
2. CONTRACTOR TO FIELD VERIFY EXISTING PIPE TIE IN LOCATIONS PRIOR TO CONSTRUCTION.

COMMONWEALTH OF MASSACHUSETTS
LANE PATRICK PULS
CIVIL
No. 48318
REGISTERED PROFESSIONAL ENGINEER
7-2-2021

ISSUED FOR CONSTRUCTION

NO.	DATE	DESIGN REVISIONS	BY	CHK	APP	APP
A	07/01/21	ISSUED FOR CONSTRUCTION	JAS	MJD	-	-

BURNS McDONNELL

129460

date JAN. 22, 2021
designed J. SCHATZ
detailed J. SCHATZ
checked CHECKER

NO.	DATE	AS BUILT REVISIONS	BY	CHK	APP	APP
–	–	–	–	–	–	–

EVERSOURCE ENERGY

TITLE
NORTH WASHINGTON STREET
BRIDGE CABLE REPLACEMENT
SOUTH VAULT CIRCUIT 250–517 DETAILS
BOSTON, MASSACHUSETTS

BY J.SCHATZ – BMcD	CHKD M.DAGENAIS – BMcD	APP N.SCOTT – BMcD	APP (BMcD)
DATE 02/09/21	DATE	DATE	DATE
H-SCALE N/A	SIZE D	FIELD BOOK & PAGES	
V-SCALE N/A	V.S.	R.E. DWG	
R.E. PROJ. NUMBER	129460	NUSCO	PG12

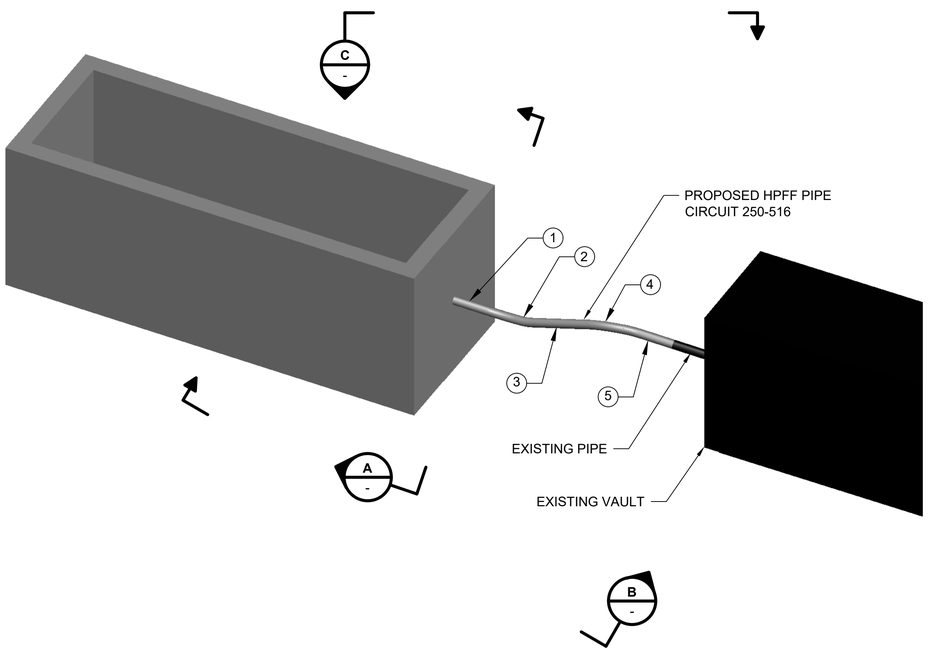

ISOMETRIC VIEW

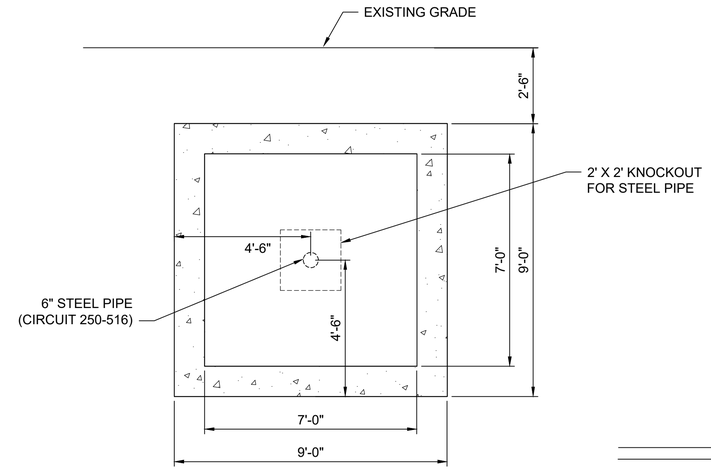

TRANSITION VAULT CIRCUIT 250-516
SOUTH HPFF END WALL

SECTION A -

SEGMENTS	LENGTH (FT)	RADIUS (FT)	ANGLE (DEG)	ROTATION (DEG)
1	2.00			
2		6	30	20
3	4.96			
4		6	31	21
5	2.00			

TRANSITION PIPE SEGMENT TABLE

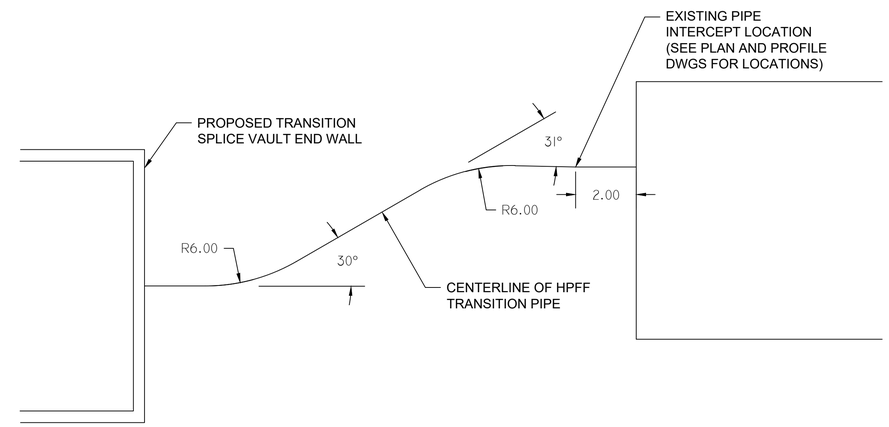

TRANSITION PIPE PROFILE VIEW

SECTION B -

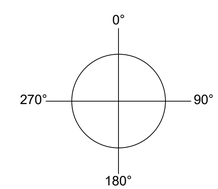

ANGLE TO BE MEASURED PLUMB FROM
VAULT FACE LOOKING TOWARDS
TRANSITION PIPE TIE-IN LOCATION

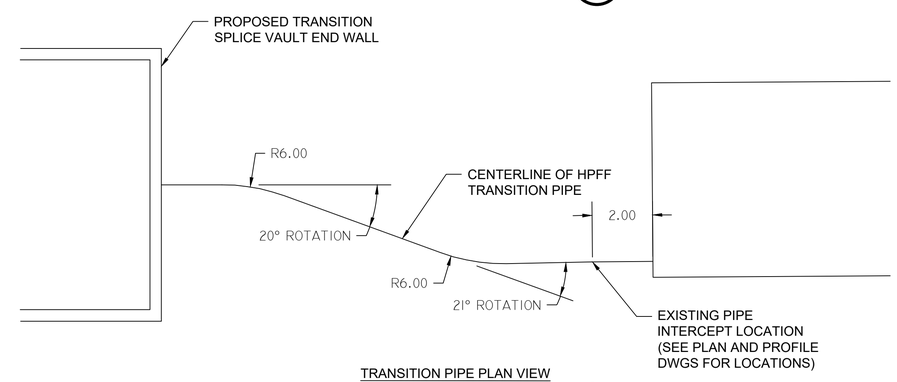

TRANSITION PIPE PLAN VIEW

SECTION C -

NOTE:

1. SPLICE VAULTS AS SHOWN BASED ON AN ASSUMED WALL THICKNESS OF 1'-0". CONTRACTOR RESPONSIBLE FOR FINAL DESIGN OF CAST-IN PLACE VAULT.
2. CONTRACTOR TO FIELD VERIFY EXISTING PIPE TIE IN LOCATIONS PRIOR TO CONSTRUCTION.

COMMONWEALTH OF MASSACHUSETTS
LANE PATRICK PULS
CIVIL
No. 48318
REGISTERED PROFESSIONAL ENGINEER
7-2-2021

ISSUED FOR CONSTRUCTION

NO.	DATE	DESIGN REVISIONS	BY	CHK	APP	APP
0	07/02/21	ISSUED FOR CONSTRUCTION	JAS	MJD	-	-

BURNS McDONNELL

129460

date JAN. 22, 2021
detailed J. SCHATZ
designed J. SCHATZ
checked CHECKER

NO.	DATE	AS BUILT REVISIONS	BY	CHK	APP	APP
–	–	–	–	–	–	–

EVERSOURCE ENERGY

TITLE
NORTH WASHINGTON STREET
BRIDGE CABLE REPLACEMENT
SOUTH VAULT CIRCUIT 250–516 DETAILS
BOSTON, MASSACHUSETTS

BY J.SCHATZ – BMcD	CHKD M.DAGENAIS – BMcD	APP N.SCOTT – BMcD	APP (BMcD)
DATE 02/09/21	DATE	DATE	DATE
H-SCALE N/A / V-SCALE N/A	SIZE D / D	FIELD BOOK & PAGES	
	V.S.	R.E. DWG	
R.E. PROJ. NUMBER	129460	NUSCO	PG13

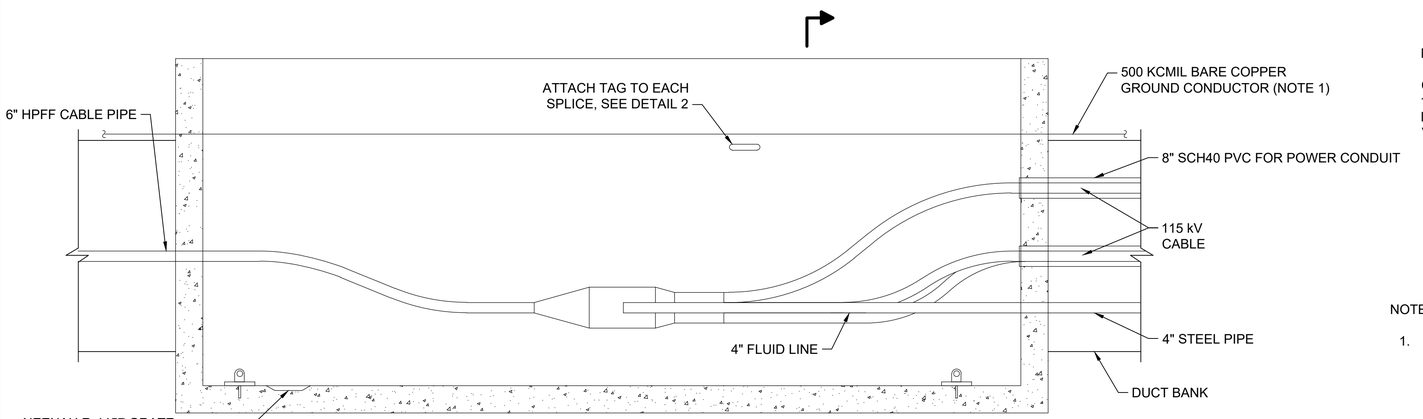

SPLICE VAULT ELEVATION VIEW

DETAIL 1 / - NTS

NOTE:

CONTRACTOR SHALL ATTACH BRASS TAG 1'-6" BELOW FINISHED GRADE ON THE INSIDE OF THE CHIMNEY AND ON THE VAULT WALL OPPOSITE THE RACKING.

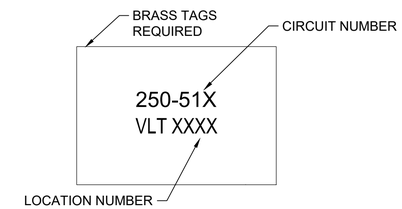

PROFILE VIEW

DETAIL 2 / - NTS

NOTES:

1. CONTRACTOR SHALL ATTACH TAG 6" FROM THE CONDUIT ON EACH END WALL OF SPLICE VAULT AS SHOWN IN SECTION A WITH DELINEATION OF NEXT SPLICE VAULT IN THE CIRCUIT AND DISTANCE TO SPLICE VAULT.

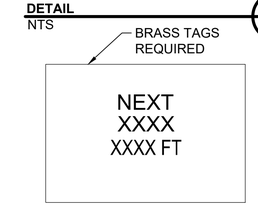

PROFILE VIEW

DETAIL 3 / - NTS

SPLICE VAULT NUMBER SPACING DESIGNATION

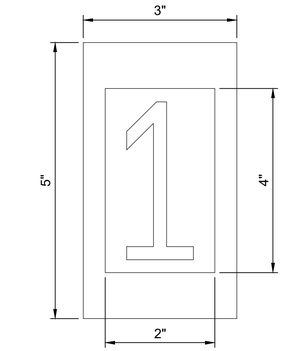

DETAIL 4 / - NTS

NOTES:

1. CHARACTER SHALL BE 4" HIGH BOLD TYPE.
2. CHARACTER SHALL BE CENTERED ON SIGN.
3. - BACKGROUND: WHITE
   - LETTERING: BLACK
   - CHARACTERS: 1, 2, & 3 AS SHOWN.

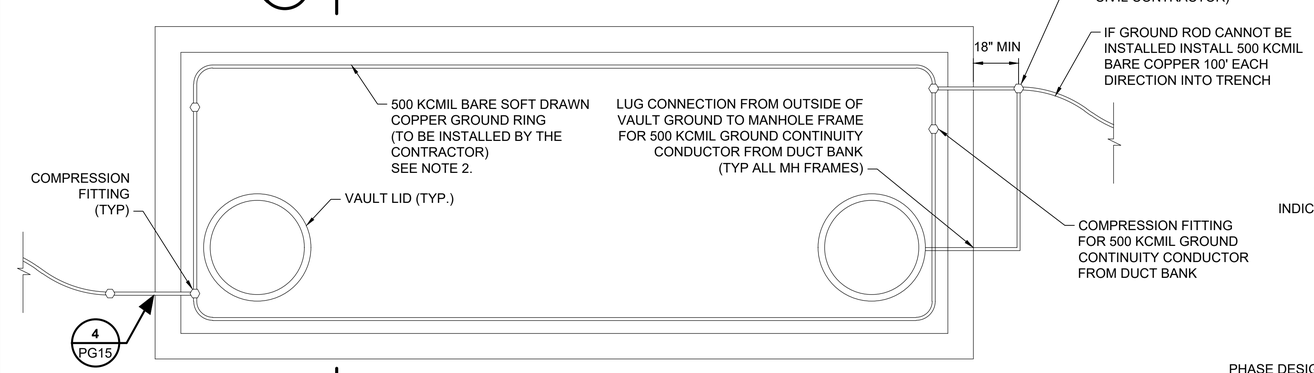

VAULT GROUNDING DETAIL PLAN VIEW

DETAIL 5 / - NTS

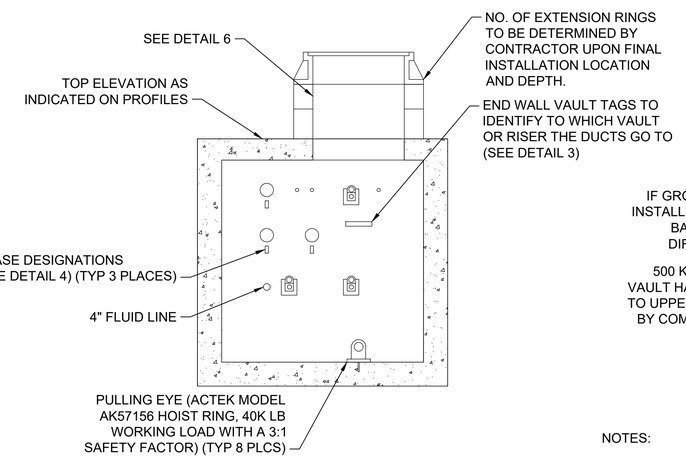

SPLICE VAULT

SECTION A / - NTS

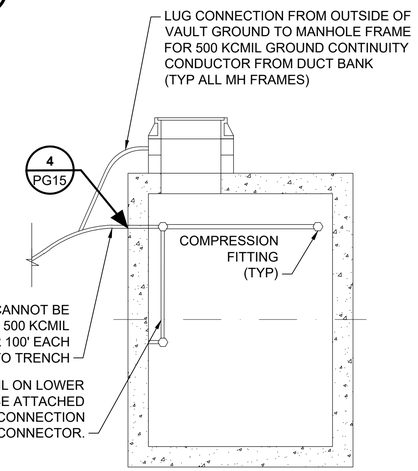

SPLICE VAULT

SECTION B / - NTS

NOTES:

1. GROUND PIGTAILS TO EXTEND A MINIMUM OF 18 INCHES FROM BOTH SIDES OF VAULT WALL PENETRATION.
2. GROUND CLIPS MAX 1' FROM ALL MANHOLE CORNERS, AND MAX 4' OC SPACING ALONG WALLS USE 1/2" PVC COATED. MALLEABLE IRON RIGID STEEL CONDUIT 1 HOLE STRAP WITH BACKSTRAP. ALL HARDWARE AND INSERTS TO BE STAINLESS STEEL.
3. ALL GROUND CONNECTIONS TO MANHOLE RACKS ETC. SHALL BE VIA A TINNED CU 1 HOLE.
4. PASS GROUND CONDUCTOR THROUGH VAULT WALL AND SUPPORT ALONG VAULT WALL AS HIGH AS POSSIBLE BUT NO MORE THAN 12" DOWN FROM VAULT CEILING.
5. BOND GROUNDS FROM EARTHING TO VAULT/DUCTBANK GROUND.
6. CABLE VENDOR IS TO PLACE PHASE DESIGNATIONS.

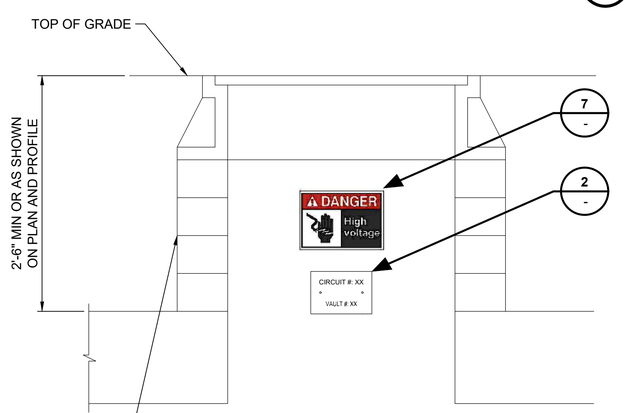

SPLICE VAULT CHIMNEY

DETAIL 6 / - NTS

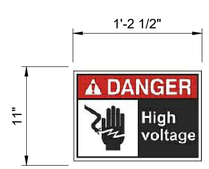

DANGER WARNING SIGN

DETAIL 7 / - NTS

COMMONWEALTH OF MASSACHUSETTS
LANE PATRICK PULS
CIVIL
No. 48318
REGISTERED PROFESSIONAL ENGINEER
7-2-2021

ISSUED FOR CONSTRUCTION

NO.	DATE	DESIGN REVISIONS	BY	CHK	APP	APP
0	07/02/21	ISSUED FOR CONSTRUCTION	JAS	MJD	-	-

BURNS McDONNELL

129460

date JAN. 22, 2021	detailed J. SCHATZ
designed M.DAGNAIS	checked N.SCOTT

NO.	DATE	AS BUILT REVISIONS	BY	CHK	APP	APP
–	–	–	–	–	–	–

EVERSOURCE ENERGY

TITLE: NORTH WASHINGTON STREET BRIDGE CABLE REPLACEMENT TYPICAL VAULT DETAILS 1 OF 5

BOSTON, MASSACHUSETTS

BY J.SCHATZ – BMcD	CHKD M.DAGENAIS – BMcD	APP N.SCOTT – BMcD	APP (BMcD)
DATE 02/09/21	DATE	DATE	DATE
H-SCALE N/A / V-SCALE N/A	SIZE D / D	V.S.	FIELD BOOK & PAGES / R.E. DWG
R.E. PROJ. NUMBER	129460	NUSCO	PG14

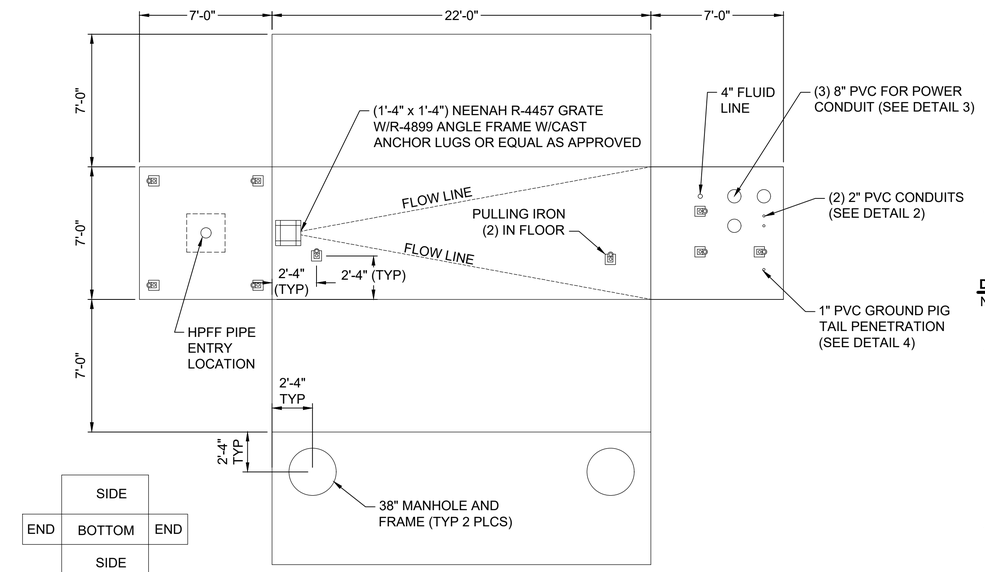

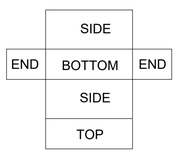

WALLS FOLD UP

CIRCUIT 250-517 SPLICE VAULT DEVELOPMENT PLAN

DETAIL 1
NTS

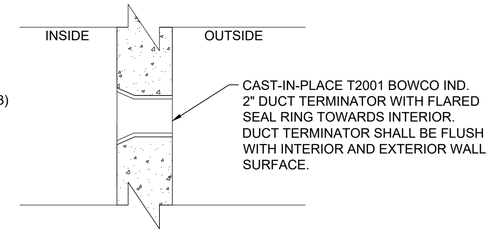

2" DUCT TERMINATOR DETAIL

DETAIL 2
NTS

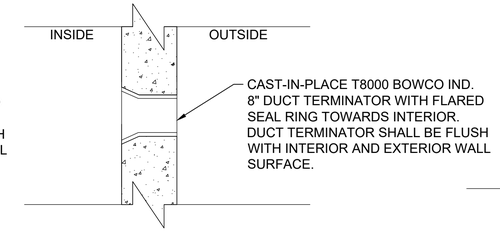

8" DUCT TERMINATOR DETAIL

DETAIL 3
NTS

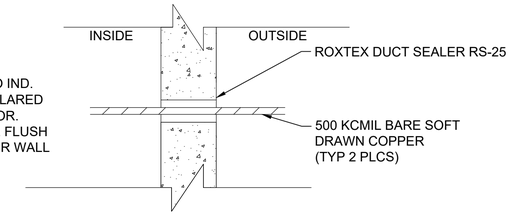

2" DUCT TERMINATOR DETAIL PROFILE VIEW

DETAIL 4
NTS

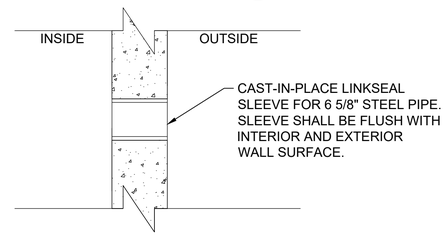

2" DUCT TERMINATOR DETAIL

DETAIL 5
NTS

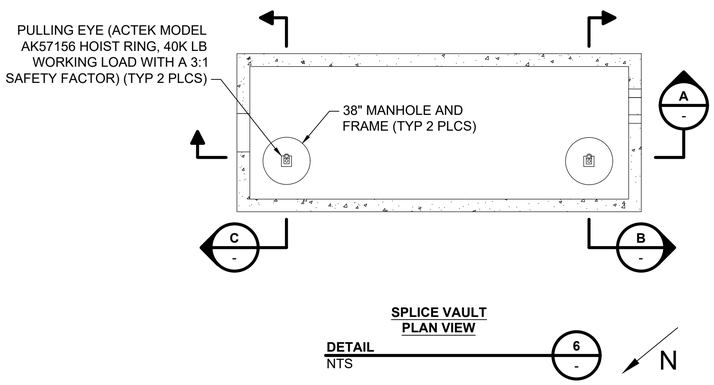

SPLICE VAULT PLAN VIEW

DETAIL 6
NTS

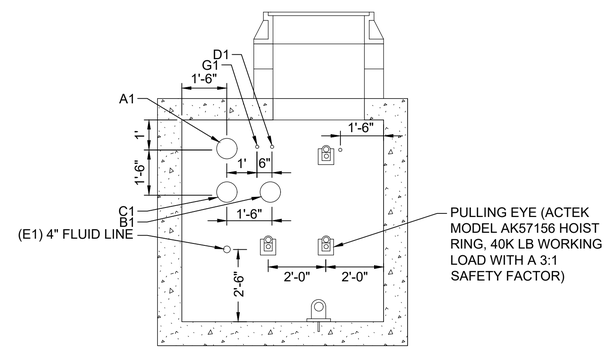

SIDE ELEVATION VIEW

SECTION B
NTS

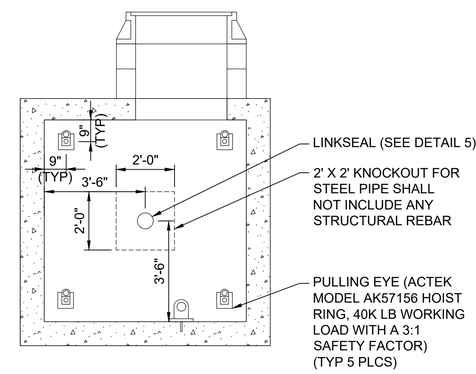

SIDE ELEVATION VIEW

SECTION C
NTS

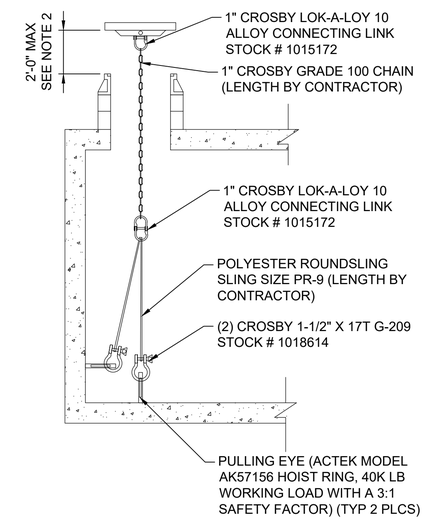

MANHOLE TETHER DETAIL

DETAIL 7
NTS

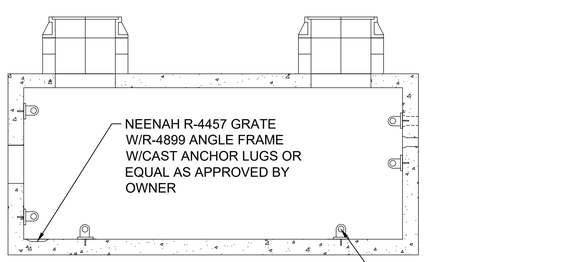

ELEVATION VIEW

SECTION A
NTS

NOTES:

1. FERROUS REBAR WITHIN SPLICE CHAMBER WALLS SHALL NOT FORM A CLOSED LOOP AROUND ANY INDIVIDUAL 8" CONDUIT OPENING.
2. CONTRACTOR TO ADJUST TETHER SYSTEM FOR MAXIMUM COVER RISE OF 24"

COMMONWEALTH OF MASSACHUSETTS
LANE PATRICK PULS
CIVIL
No. 48318
REGISTERED PROFESSIONAL ENGINEER
7-2-2021

ISSUED FOR CONSTRUCTION

NO.	DATE	DESIGN REVISIONS	BY	CHK	APP	APP
0	07/02/21	ISSUED FOR CONSTRUCTION	JAS	MJD	-	-

BURNS McDONNELL

129460

date JAN. 22, 2021
detailed J. SCHATZ
designed M.DAGENAIS
checked N.SCOTT

NO.	DATE	AS BUILT REVISIONS	BY	CHK	APP	APP
–	–	–	–	–	–	–

EVERSOURCE ENERGY

TITLE
NORTH WASHINGTON STREET
BRIDGE CABLE REPLACEMENT
VAULT DETAILS NORTH CIRCUIT 250-517 2 OF 5
BOSTON, MASSACHUSETTS

BY J.SCHATZ – BMcD	CHKD M.DAGENAIS – BMcD	APP N.SCOTT – BMcD	APP (BMcD)
DATE 02/09/21	DATE	DATE	DATE
H-SCALE N/A / V-SCALE N/A	SIZE D	FIELD BOOK & PAGES	
R.E. PROJ. NUMBER 129460	V.S.	R.E. DWG	NUSCO

PG15

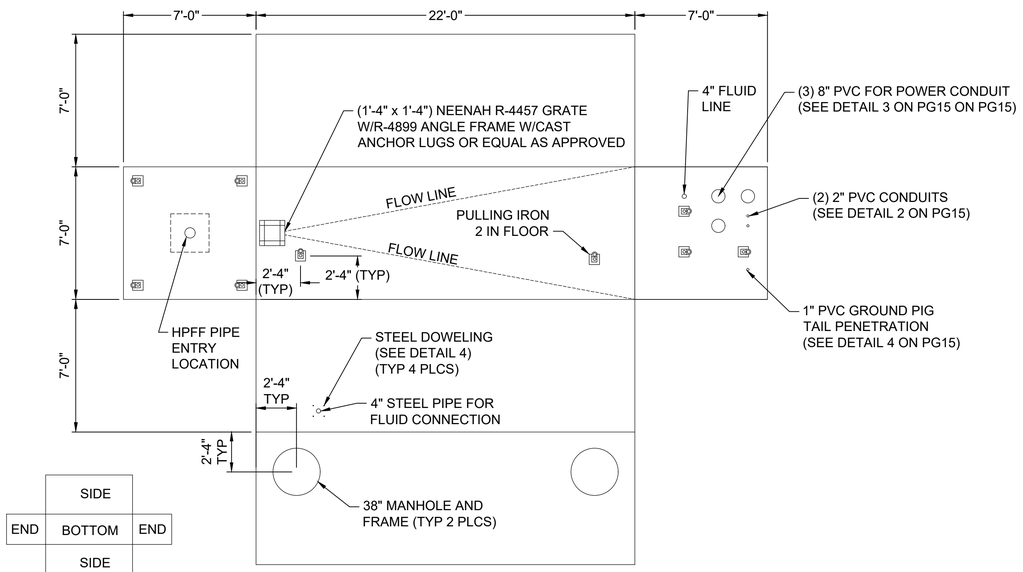

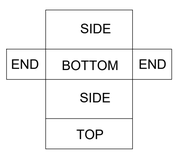

WALLS FOLD UP

CIRCUIT 250-516 SPLICE VAULT DEVELOPMENT PLAN

DETAIL 1 / -
NTS

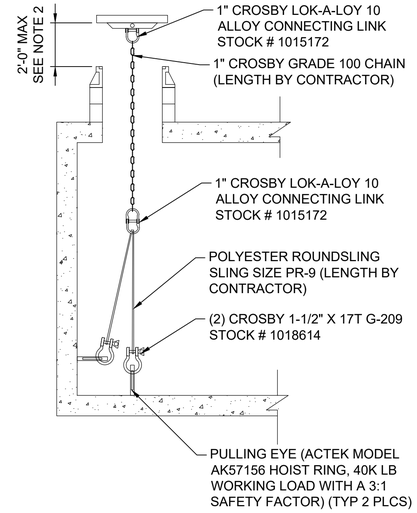

MANHOLE TETHER DETAIL

DETAIL 3 / -
NTS

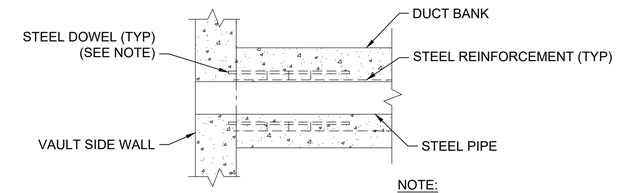

NOTE:

1. STEEL DOWELING SHALL PENETRATE VAULT WALL A MINIMUM OF 3". STEEL SHALL OVERLAP 1'-6" AND BE TIED TOGETHER.

4" STEEL PIPE VAULT PENATRATION

DETAIL 4 / -
NTS

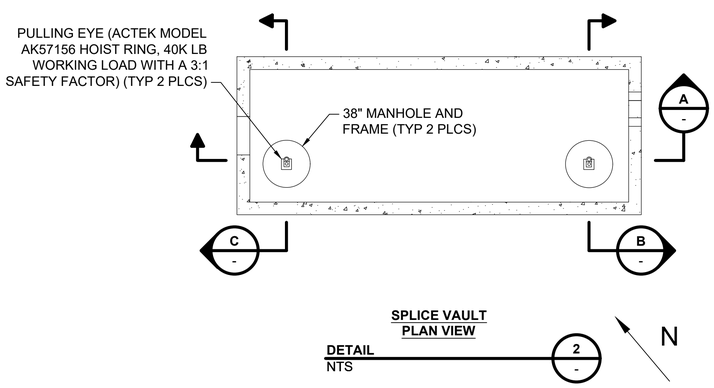

SPLICE VAULT PLAN VIEW

DETAIL 2 / -
NTS

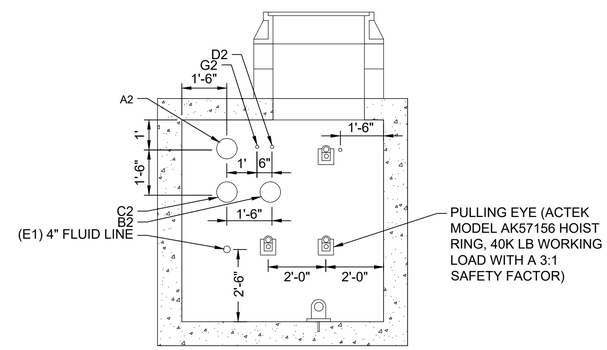

SIDE ELEVATION VIEW

SECTION B / -
NTS

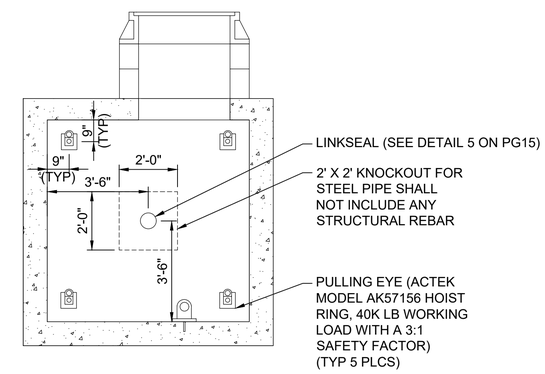

SIDE ELEVATION VIEW

SECTION C / -
NTS

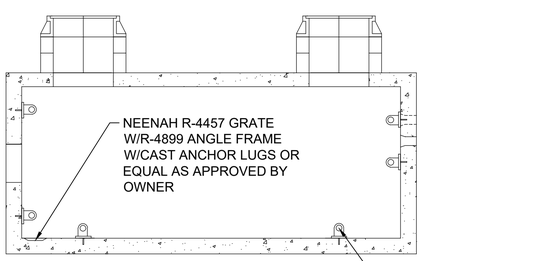

ELEVATION VIEW

SECTION A / -
NTS

NOTES:

1. FERROUS REBAR WITHIN SPLICE CHAMBER WALLS SHALL NOT FORM A CLOSED LOOP AROUND ANY INDIVIDUAL 8" CONDUIT OPENING.
2. CONTRACTOR TO ADJUST TETHER SYSTEM FOR MAXIMUM COVER RISE OF 24"

COMMONWEALTH OF MASSACHUSETTS
LANE PATRICK PULS
CIVIL
No. 48318
REGISTERED PROFESSIONAL ENGINEER
7-2-2021

ISSUED FOR CONSTRUCTION

NO.	DATE	DESIGN REVISIONS	BY	CHK	APP	APP
0	07/02/21	ISSUED FOR CONSTRUCTION	JAS	MJD	-	-

BURNS McDONNELL

129460

date JAN. 22, 2021
detailed J. SCHATZ
designed M.DAGENAIS
checked N.SCOTT

NO.	DATE	AS BUILT REVISIONS	BY	CHK	APP	APP
–	–	–	–	–	–	–

EVERSOURCE ENERGY

TITLE NORTH WASHINGTON STREET BRIDGE CABLE REPLACEMENT VAULT DETAILS NORTH CIRCUIT 250–516 3 OF 5
BOSTON, MASSACHUSETTS

BY J.SCHATZ – BMcD	CHKD M.DAGENAIS – BMcD	APP N.SCOTT – BMcD	APP (BMcD)
DATE 02/09/21	DATE	DATE	DATE
H-SCALE N/A / V-SCALE N/A	SIZE D / V.S.	FIELD BOOK & PAGES	R.E. DWG
R.E. PROJ. NUMBER 129460		NUSCO	PG16

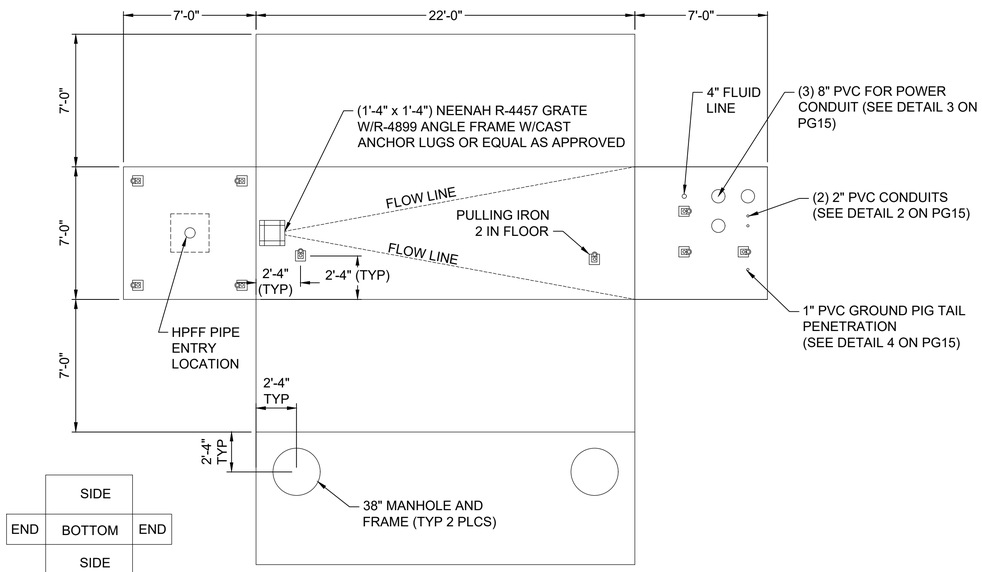

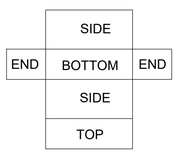

WALLS FOLD UP

CIRCUIT 250-517 SPLICE VAULT DEVELOPMENT PLAN

DETAIL 1 / -
NTS

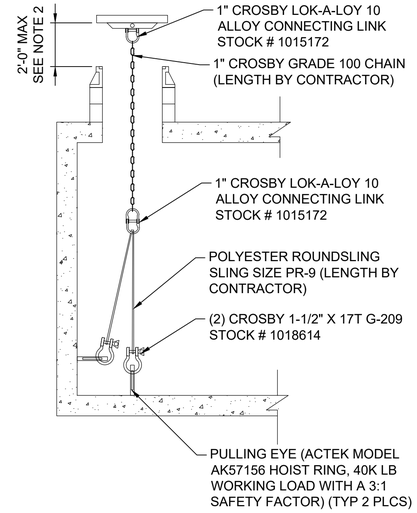

MANHOLE TETHER DETAIL

DETAIL 3 / -
NTS

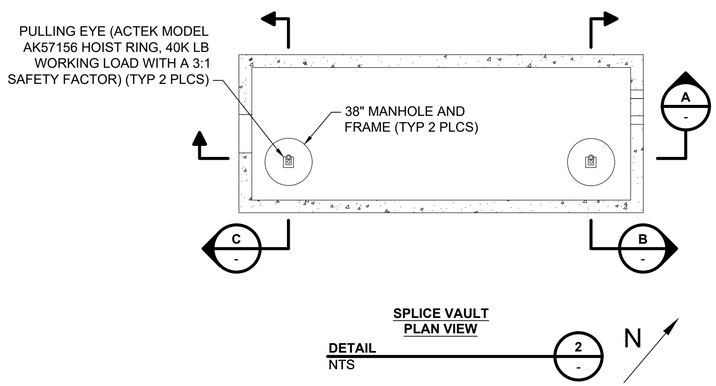

SPLICE VAULT PLAN VIEW

DETAIL 2 / -
NTS

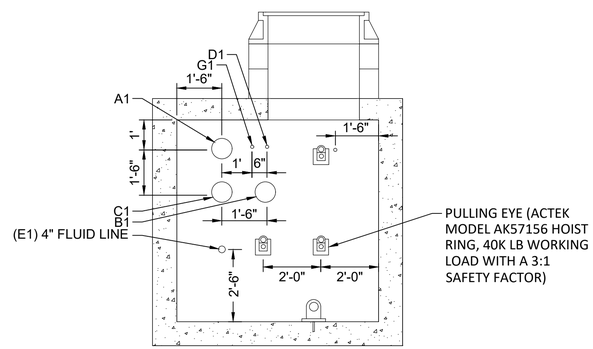

SIDE ELEVATION VIEW

SECTION B / -
NTS

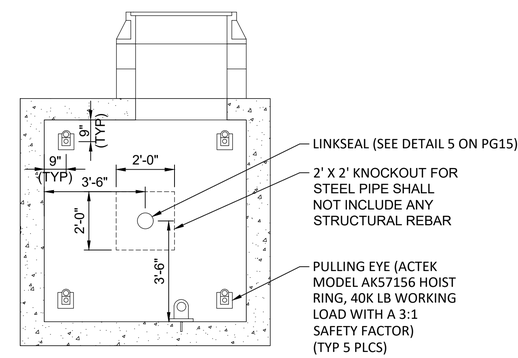

SIDE ELEVATION VIEW

SECTION C / -
NTS

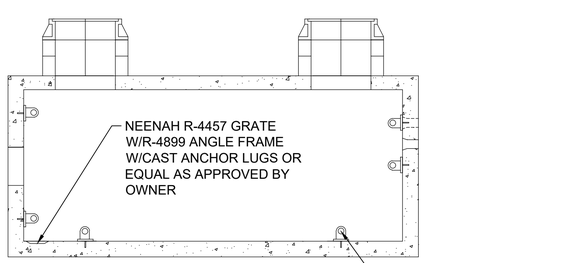

ELEVATION VIEW

SECTION A / -
NTS

NOTES:

1. FERROUS REBAR WITHIN SPLICE CHAMBER WALLS SHALL NOT FORM A CLOSED LOOP AROUND ANY INDIVIDUAL 8" CONDUIT OPENING.
2. CONTRACTOR TO ADJUST TETHER SYSTEM FOR MAXIMUM COVER RISE OF 24"

COMMONWEALTH OF MASSACHUSETTS
LANE PATRICK PULS
CIVIL
No. 48318
REGISTERED PROFESSIONAL ENGINEER
7-2-2021

ISSUED FOR CONSTRUCTION

NO.	DATE	DESIGN REVISIONS	BY	CHK	APP	APP
0	07/02/21	ISSUED FOR CONSTRUCTION	JAS	MJD	-	-

BURNS McDONNELL

129460

date JAN. 22, 2021
detailed J. SCHATZ
designed M.DAGENAIS
checked CHECKER

NO.	DATE	AS BUILT REVISIONS	BY	CHK	APP	APP
–	–	–	–	–	–	–

EVERSOURCE ENERGY

TITLE
NORTH WASHINGTON STREET
BRIDGE CABLE REPLACEMENT
VAULT DETAILS SOUTH CIRCUIT 250–517 4 OF 5
BOSTON, MASSACHUSETTS

BY J.SCHATZ – BMcD	CHKD M.DAGENAIS – BMcD	APP N.SCOTT – BMcD	APP (BMcD)
DATE 02/09/21	DATE	DATE	DATE
H-SCALE N/A	SIZE D	FIELD BOOK & PAGES	
V-SCALE N/A	V.S.	R.E. DWG	
R.E. PROJ. NUMBER 129460		NUSCO	PG17

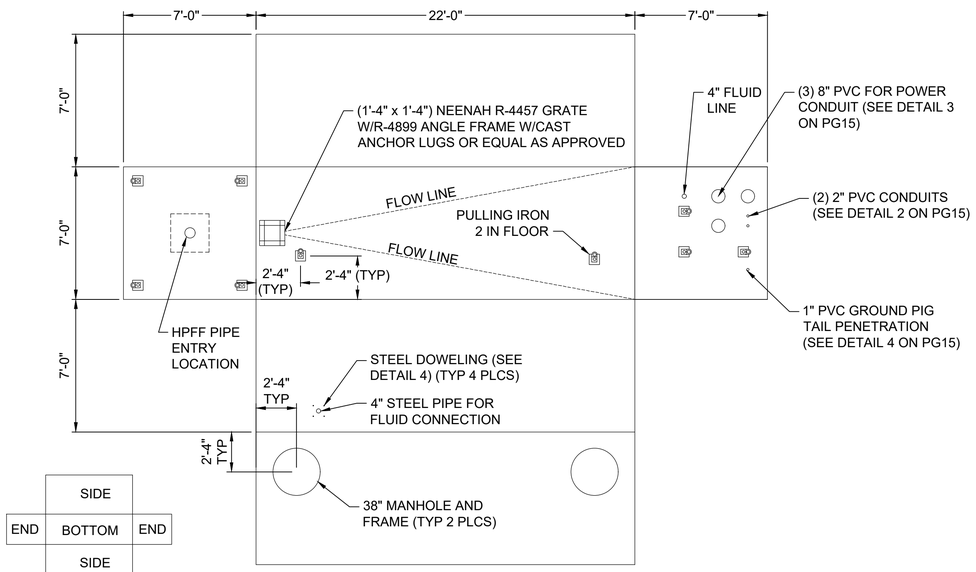

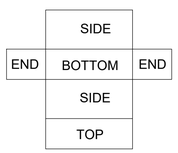

WALLS FOLD UP

CIRCUIT 250-516 SPLICE VAULT DEVELOPMENT PLAN

DETAIL 1 / -
NTS

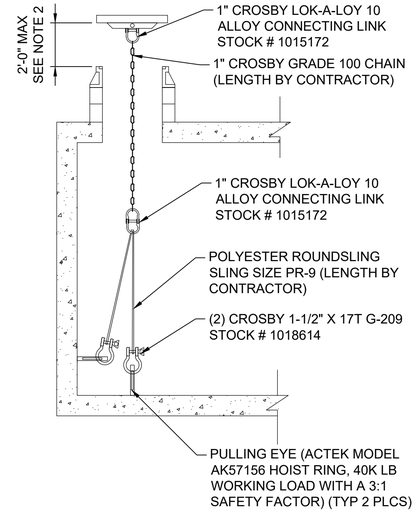

MANHOLE TETHER DETAIL

DETAIL 3 / -
NTS

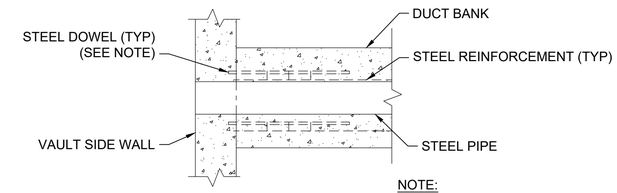

NOTE:

1. STEEL DOWELING SHALL PENETRATE VAULT WALL A MINIMUM OF 3". STEEL SHALL OVERLAP 1'-6" AND BE TIED TOGETHER.

4" STEEL PIPE VAULT PENATRATION

DETAIL 4 / -
NTS

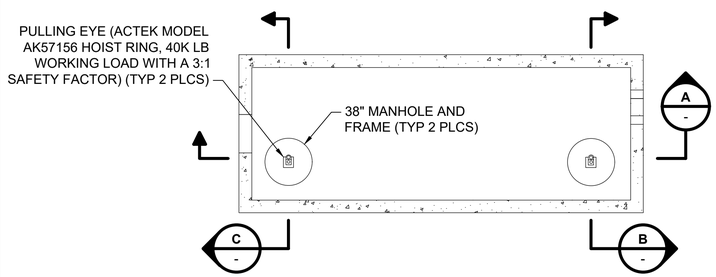

SPLICE VAULT PLAN VIEW

DETAIL 2 / -
NTS

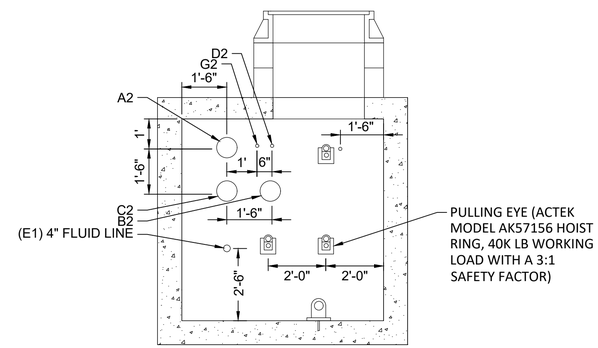

SIDE ELEVATION VIEW

SECTION B / -
NTS

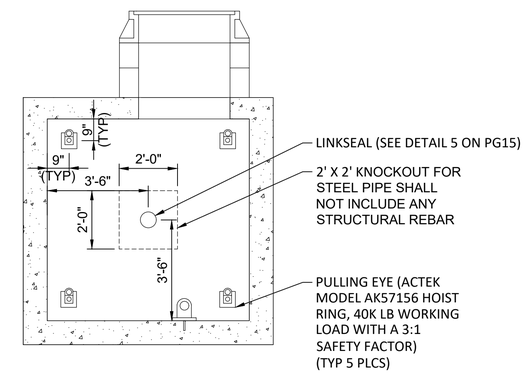

SIDE ELEVATION VIEW

SECTION C / -
NTS

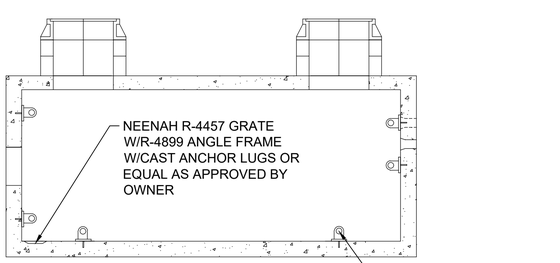

ELEVATION VIEW

SECTION A / -
NTS

NOTES:

1. FERROUS REBAR WITHIN SPLICE CHAMBER WALLS SHALL NOT FORM A CLOSED LOOP AROUND ANY INDIVIDUAL 8" CONDUIT OPENING.
2. CONTRACTOR TO ADJUST TETHER SYSTEM FOR MAXIMUM COVER RISE OF 24"

COMMONWEALTH OF MASSACHUSETTS
LANE PATRICK PULS
CIVIL
No. 48318
REGISTERED PROFESSIONAL ENGINEER
7-2-2021

ISSUED FOR CONSTRUCTION

NO.	DATE	DESIGN REVISIONS	BY	CHK	APP	APP
0	07/02/21	ISSUED FOR CONSTRUCTION	JAS	MJD	-	-

BURNS McDONNELL

129460

date JAN. 22, 2021
detailed J. SCHATZ
designed M.DAGENAIS
checked N.SCOTT

NO.	DATE	AS BUILT REVISIONS	BY	CHK	APP	APP
–	–	–	–	–	–	–

EVERSOURCE ENERGY

TITLE
NORTH WASHINGTON STREET
BRIDGE CABLE REPLACEMENT
VAULT DETAILS SOUTH CIRCUIT 250–516 5 OF 5
BOSTON, MASSACHUSETTS

BY J.SCHATZ – BMcD	CHKD M.DAGENAIS – BMcD	APP N.SCOTT – BMcD	APP (BMcD)
DATE 02/09/21	DATE	DATE	DATE
H-SCALE N/A	SIZE D	FIELD BOOK & PAGES	
V-SCALE N/A	V.S.	R.E. DWG	
R.E. PROJ. NUMBER 129460		NUSCO	PG18

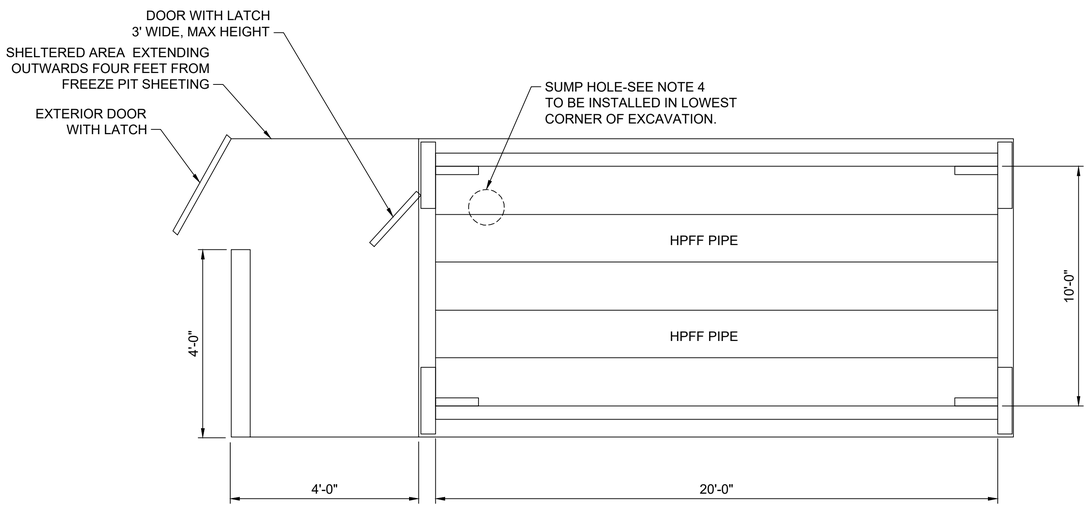

TOP VIEW

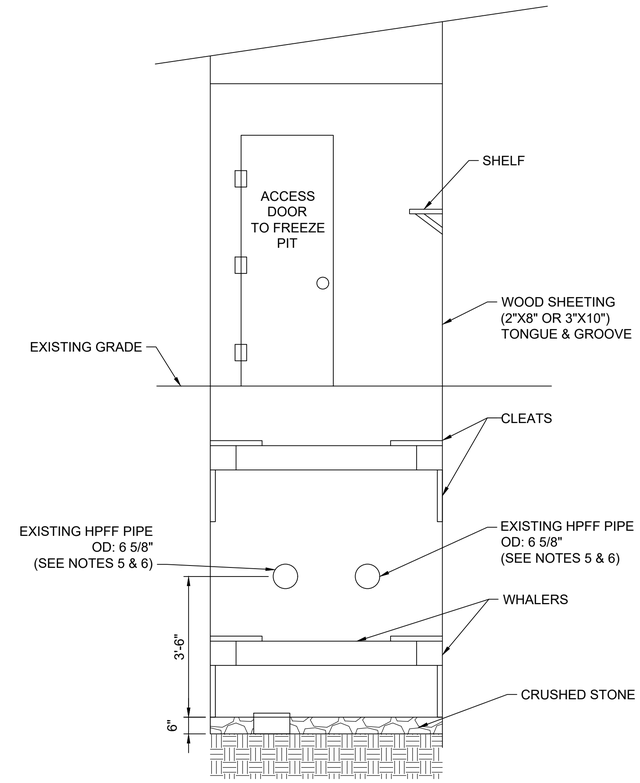

END ELEVATION VIEW

FREEZE PIT

DETAIL 1
NTS -

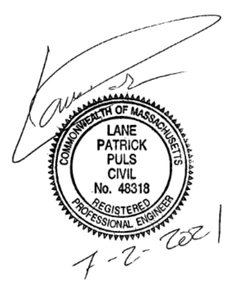

GENERAL NOTES:

1. FREEZE PIT SHOWN FOR INFORMATION ONLY. CONTRACTOR SHALL DESIGN SITE SPECIFIC FREEZE PIT.
2. COMPLETED SHED EXTERIOR TO BE COVERED WITH HEAVY GAUGE ROOFING PAPER AND PLASTIC SHEETING.
   A. PROVISIONS SHALL BE TAKEN TO ENSURE INTERIOR OF SHED REMAINS WATERPROOF DURING ENTIRE PROJECT.
   B. PROVISIONS SHALL BE TAKEN TO KEEP ALL GROUND AND RAIN WATER AWAY FROM FREEZE PIT.
   C. PUMPS SHALL BE USED TO MAINTAIN A DRY FREEZE PIT EXCAVATION AT ALL TIMES.
3. FREEZES ARE TO BE MONITORED CONSTANTLY UNTIL RELEASED BY EVERSOURCE.
4. MINIMUM OF ONE SUMP HOLE, WITH ADDITIONAL SUMP HOLES ADDED BASED ON EXISTING CONDITIONS.
5. LOCATION OF FREEZE PIT TO BE DETERMINED BY FIELD CONDITIONS. USE CAUTION WORKING AROUND THE OTHER CIRCUIT.
6. NEAT-LINE PIPES SHOWN FOR CLARITY. ACTUAL LOCATION/ORIENTATION MAY VARY DUE TO PRESENCE OF HORIZONTAL/VERTICAL BENDS.

REFERENCE DRAWINGS:

1. PG03, PG04, PG05 & PG06: CIRCUIT 250-516 & 250-517 PLAN & PROFILE

ISSUED FOR CONSTRUCTION

NO.	DATE	DESIGN REVISIONS	BY	CHK	APP	APP
0	07/02/21	ISSUED FOR CONSTRUCTION	JAS	MJD	-	-

BURNS McDONNELL

129460

date JAN. 22, 2021	detailed J. SCHATZ
designed M.DAGENAIS	checked CHECKER

NO.	DATE	AS BUILT REVISIONS	BY	CHK	APP	APP
–	–	–	–	–	–	–

EVERSOURCE ENERGY

TITLE: NORTH WASHINGTON STREET BRIDGE CABLE REPLACEMENT FREEZE PIT DETAILS
BOSTON, MASSACHUSETTS

BY J. SCHATZ – BMcD	CHKD M.DAGENAIS – BMcD	APP N.SCOTT – BMcD	APP –
DATE 1/22/21	DATE	DATE	DATE
H-SCALE N/A	SIZE D	FIELD BOOK & PAGES	
V-SCALE N/A	V.S.	R.E. DWG –	
R.E. PROJ. NUMBER		DWG NO. PG19	

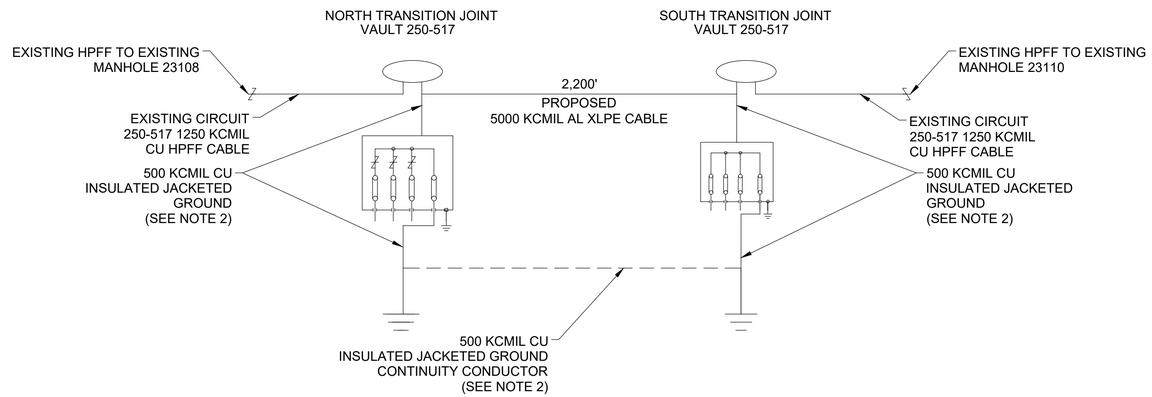

CIRCUIT 250-517
TRANSITION VAULT TO
TRANSITION VAULT

DETAIL 1
NTS -

LEGEND:

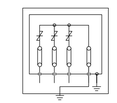

3-PHASE SHEATH
VOLTAGE LIMITER (SVL)
LINK BOX

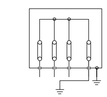

3-PHASE DISCONNECT
LINK BOX

PARALLEL GROUND CONTINUITY
CONDUCTOR

GROUND ROD

TRANSITION JOINT

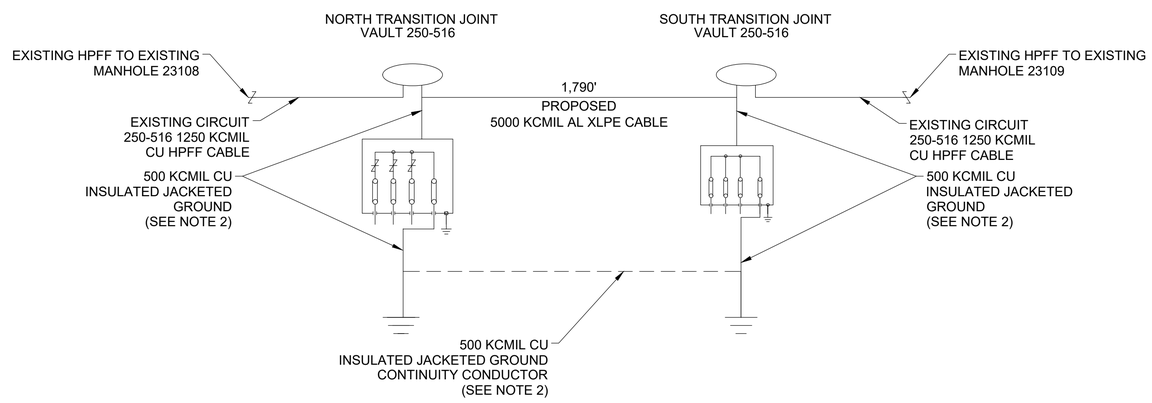

CIRCUIT 250-516
TRANSITION VAULT TO
TRANSITION VAULT

DETAIL 2
NTS -

NOTES:

1. ALL LINK BOXES IN VAULTS TO HAVE VIEWING WINDOWS.
2. ALL INSULATED GROUNDING AND BONDING CABLES SHALL HAVE A MINIMUM JACKET THICKNESS OF 130 MILS.

COMMONWEALTH OF MASSACHUSETTS
LANE PATRICK PULS
CIVIL
No. 48318
REGISTERED PROFESSIONAL ENGINEER
7-2-2021

ISSUED FOR CONSTRUCTION

NO.	DATE	DESIGN REVISIONS	BY	CHK	APP	APP
0	07/02/21	ISSUED FOR CONSTRUCTION	JAS	MJD	-	-

BURNS McDONNELL

129460

date JAN. 22, 2021
detailed J. SCHATZ
designed M.DAGENAIS
checked N.SCOTT

NO.	DATE	AS BUILT REVISIONS	BY	CHK	APP	APP
–	–	–	–	–	–	–

EVERSOURCE ENERGY

TITLE: NORTH WASHINGTON STREET BRIDGE CABLE REPLACEMENT BONDING DIAGRAM
BOSTON, MASSACHUSETTS

BY J.SCHATZ – BMcD | CHKD M.DAGENAIS – BMcD | APP N.SCOTT – BMcD | APP (BMcD)
DATE 01/22/21 | DATE | DATE | DATE
H-SCALE N/A | V-SCALE N/A | SIZE D | D | V.S. | FIELD BOOK & PAGES | R.E. DWG
R.E. PROJ. NUMBER 129460 | NUSCO

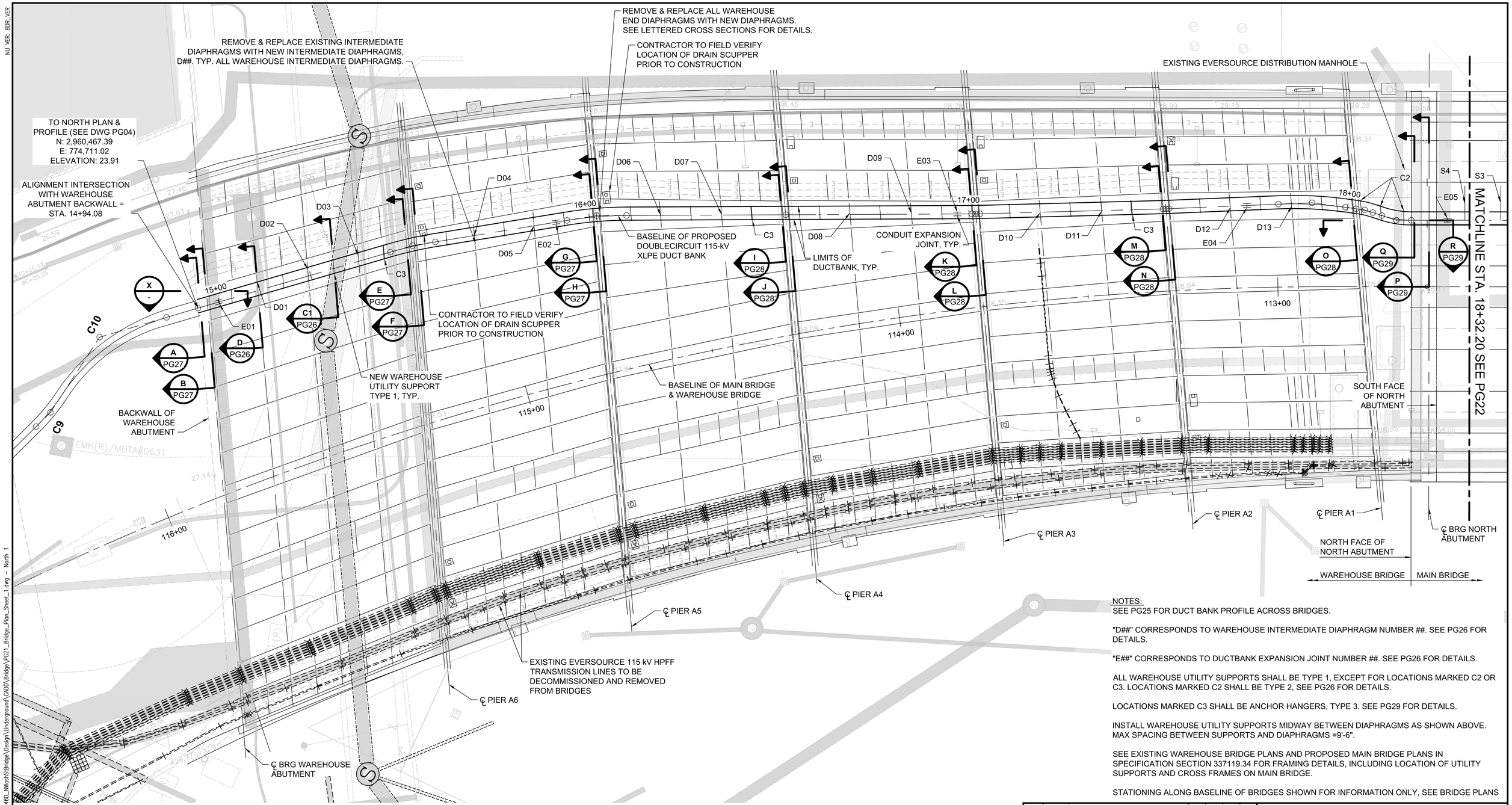

NOTES:

SEE PG25 FOR DUCT BANK PROFILE ACROSS BRIDGES.

"D##" CORRESPONDS TO WAREHOUSE INTERMEDIATE DIAPHRAGM NUMBER ##. SEE PG26 FOR DETAILS.

"E##" CORRESPONDS TO DUCTBANK EXPANSION JOINT NUMBER ##. SEE PG26 FOR DETAILS.

ALL WAREHOUSE UTILITY SUPPORTS SHALL BE TYPE 1, EXCEPT FOR LOCATIONS MARKED C2 OR C3. LOCATIONS MARKED C2 SHALL BE TYPE 2, SEE PG26 FOR DETAILS.

LOCATIONS MARKED C3 SHALL BE ANCHOR HANGERS, TYPE 3. SEE PG29 FOR DETAILS.

INSTALL WAREHOUSE UTILITY SUPPORTS MIDWAY BETWEEN DIAPHRAGMS AS SHOWN ABOVE. MAX SPACING BETWEEN SUPPORTS AND DIAPHRAGMS =9'-6".

SEE EXISTING WAREHOUSE BRIDGE PLANS AND PROPOSED MAIN BRIDGE PLANS IN SPECIFICATION SECTION 337119.34 FOR FRAMING DETAILS, INCLUDING LOCATION OF UTILITY SUPPORTS AND CROSS FRAMES ON MAIN BRIDGE.

STATIONING ALONG BASELINE OF BRIDGES SHOWN FOR INFORMATION ONLY, SEE BRIDGE PLANS

0 6' 12' 24'
SCALE IN FEET

NORTH

Know what's below. Call before you dig.

COMMONWEALTH OF MASSACHUSETTS
MICHAEL R. DELGREGO
STRUCTURAL
NO. 55667
REGISTERED PROFESSIONAL ENGINEER

This document has been digitally sealed.
07/02/2021

ISSUED FOR CONSTRUCTION

NO.	DATE	DESIGN REVISIONS	BY	CHK	APP	APP
0	07/02/21	ISSUED FOR CONSTRUCTION	ASF	JMD	-	-

BURNS McDONNELL

129460

date JULY 2, 2021
detailed N. FISCHER
designed A. FERDON
checked J. DAVIS

NO.	DATE	AS BUILT REVISIONS	BY	CHK	APP	APP
–	–	–	–	–	–	–

EVERSOURCE ENERGY

TITLE
NORTH WASHINGTON STREET
BRIDGE CABLE REPLACEMENT
BRIDGE PLAN SHEET 1 OF 4
BOSTON, MASSACHUSETTS

BY A. FERDON – BMcD	CHKD J.DAVIS – BMcD	APP –	APP –
DATE 07/02/21	DATE	DATE	DATE
H-SCALE 1" = 12'	SIZE D	FIELD BOOK & PAGES	
V-SCALE N/A	V.S.	R.E. DWG	
R.E. PROJ. NUMBER		NUSCO	PG21

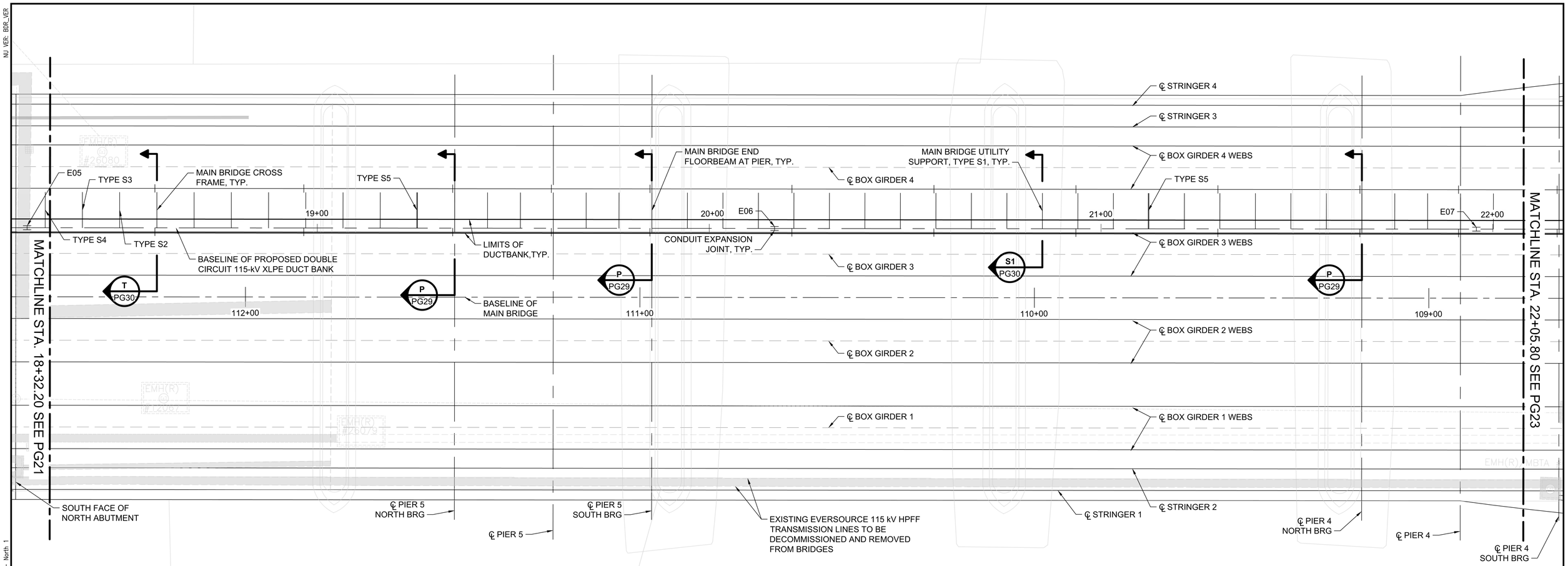

NOTES:
SEE PG25 FOR DUCT BANK PROFILE ACROSS BRIDGES.

ALL MAIN BRIDGE UTILITY SUPPORTS SHALL BE TYPE S1, EXCEPT FOR LOCATIONS MARKED S2, S3, S4, OR S5. LOCATIONS MARKED S5 SHALL BE ANCHOR HANGERS. SEE PG30 FOR DETAILS.

"E##" CORRESPONDS TO DUCTBANK EXPANSION JOINT NUMBER ##. SEE PG26 FOR DETAILS.

INSTALL HANGER FRAMES ON MAIN BRIDGE UTILITY SUPPORTS AND CROSS FRAMES. PER MAIN BRIDGE PLANS, MAX SPACING BETWEEN UTILITY SUPPORTS AND/OR CROSS FRAMES =9'-6".

SEE PROPOSED MAIN BRIDGE PLANS IN SPECIFICATION SECTION 337119.34 FOR FRAMING DETAILS, INCLUDING LOCATION OF UTILITY SUPPORTS AND CROSS FRAMES.

CROSS FRAMES AND UTILITY SUPPORTS ARE ONLY SHOWN IN BAY OF PROPOSED DUCTBANK, FOR CLARITY.

CENTERLINES OF BOX GIRDER WEBS ARE SHOWN AT TOP OF WEB.

STATIONING ALONG BASELINE OF BRIDGES SHOWN FOR INFORMATION ONLY, SEE BRIDGE PLANS.

0 6' 12' 24'
SCALE IN FEET

NORTH

Know what's below. Call before you dig.

COMMONWEALTH OF MASSACHUSETTS
MICHAEL R. DELGREGO
NO. 55667
REGISTERED PROFESSIONAL ENGINEER

This document has been digitally sealed.
07/02/2021

ISSUED FOR CONSTRUCTION

NO.	DATE	DESIGN REVISIONS	BY	CHK	APP	APP
0	07/02/21	ISSUED FOR CONSTRUCTION	ASF	JMD	-	-

BURNS McDONNELL

129460

date JULY 2, 2021
detailed N. FISCHER
designed A. FERDON
checked J. DAVIS

NO.	DATE	AS BUILT REVISIONS	BY	CHK	APP	APP
–	–	–	–	–	–	–

EVERSOURCE ENERGY

TITLE
NORTH WASHINGTON STREET
BRIDGE CABLE REPLACEMENT
BRIDGE PLAN SHEET 2 OF 4
BOSTON, MASSACHUSETTS

BY A. FERDON – BMcD	CHKD J.DAVIS – BMcD	APP –	APP –
DATE 07/02/21	DATE	DATE	DATE
H-SCALE 1" = 12'	SIZE D	FIELD BOOK & PAGES	
V-SCALE N/A	V.S.	R.E. DWG	
R.E. PROJ. NUMBER		NUSCO	

PG22

NU_VER: BDR_VER

7/2/2021 11:01 AM – mmfischer – Z:\Clients\TND\NUSC\129460_NWashSt\Bridge\Design\Underground\CADD\Bridge\PG22_Bridge_Plan_Sheet_2.dwg – North 1

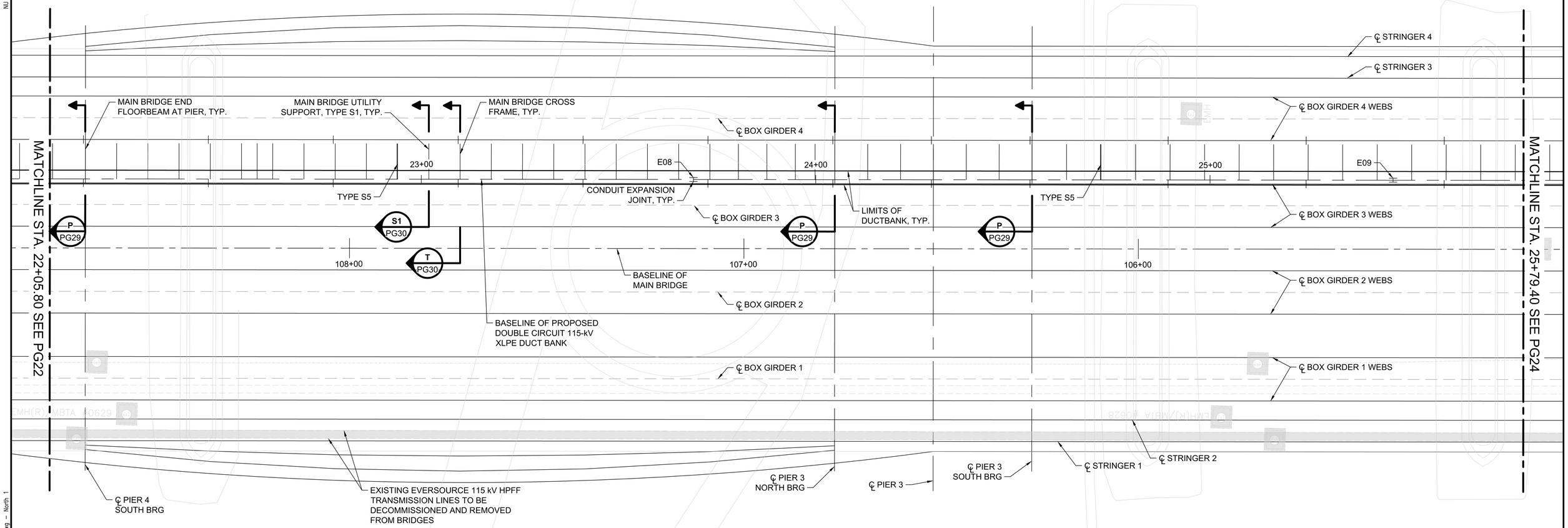

NOTES:
SEE PG25 FOR DUCT BANK PROFILE ACROSS BRIDGES.

ALL MAIN BRIDGE UTILITY SUPPORTS SHALL BE TYPE S1, EXCEPT FOR LOCATIONS MARKED S2, S3, S4, OR S5. LOCATIONS MARKED S5 SHALL BE ANCHOR HANGERS. SEE PG30 FOR DETAILS.

"E##" CORRESPONDS TO DUCTBANK EXPANSION JOINT NUMBER ##. SEE PG26 FOR DETAILS.

INSTALL HANGER FRAMES ON MAIN BRIDGE UTILITY SUPPORTS AND CROSS FRAMES. PER MAIN BRIDGE PLANS, MAX SPACING BETWEEN UTILITY SUPPORTS AND/OR CROSS FRAMES = 9'-6".

SEE PROPOSED MAIN BRIDGE PLANS IN SPECIFICATION SECTION 337119.34 FOR FRAMING DETAILS, INCLUDING LOCATION OF UTILITY SUPPORTS AND CROSS FRAMES.

CROSS FRAMES AND UTILITY SUPPORTS ARE ONLY SHOWN IN BAY OF PROPOSED DUCTBANK, FOR CLARITY.

CENTERLINES OF BOX GIRDER WEBS ARE SHOWN AT TOP OF WEB.

STATIONING ALONG BASELINE OF BRIDGE SHOWN FOR INFORMATION ONLY, SEE BRIDGE PLANS

0 6' 12' 24'
SCALE IN FEET

NORTH

Know what's below. Call before you dig.

COMMONWEALTH OF MASSACHUSETTS
MICHAEL R. DELGREGO
EXPIRES
NO. 55667
REGISTERED PROFESSIONAL ENGINEER

This document has been digitally sealed.
07/02/2021

ISSUED FOR CONSTRUCTION

NO.	DATE	DESIGN REVISIONS	BY	CHK	APP	APP
0	07/02/21	ISSUED FOR CONSTRUCTION	ASF	JMD	-	-

BURNS McDONNELL

129460

date JULY 2, 2021
detailed N. FISCHER
designed A. FERDON
checked J. DAVIS

NO.	DATE	AS BUILT REVISIONS	BY	CHK	APP	APP
–	–	–	–	–	–	–

EVERSOURCE ENERGY

TITLE
NORTH WASHINGTON STREET
BRIDGE CABLE REPLACEMENT
BRIDGE PLAN SHEET 3 OF 4
BOSTON, MASSACHUSETTS

BY A. FERDON – BMcD	CHKD J.DAVIS – BMcD	APP –	APP –
DATE 07/02/21	DATE	DATE	DATE
H-SCALE 1" = 12'	SIZE D	FIELD BOOK & PAGES	
V-SCALE N/A	V.S.	R.E. DWG	
R.E. PROJ. NUMBER		NUSCO	

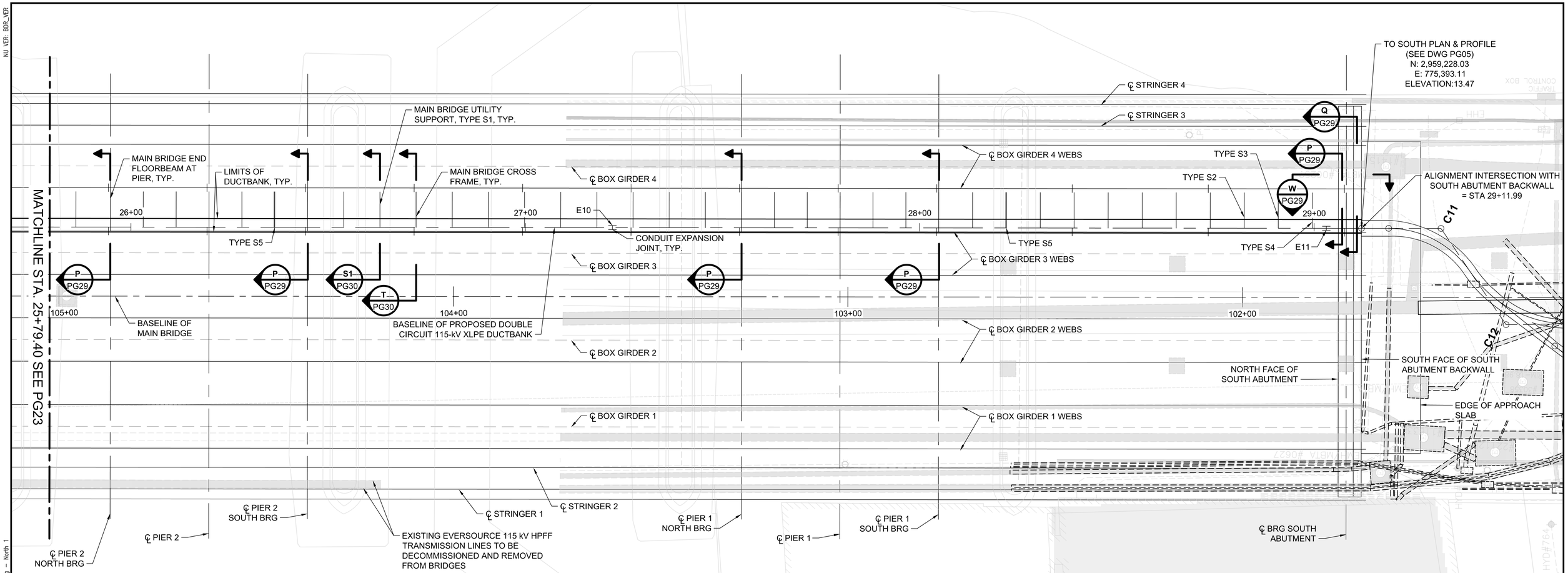

NOTES:

SEE PG25 FOR DUCT BANK PROFILE ACROSS BRIDGES.

ALL MAIN BRIDGE UTILITY SUPPORTS SHALL BE TYPE S1, EXCEPT FOR LOCATIONS MARKED S2, S3, S4, OR S5. LOCATIONS MARKED S5 SHALL BE ANCHOR HANGERS. SEE PG30 FOR DETAILS.

"E##" CORRESPONDS TO DUCTBANK EXPANSION JOINT NUMBER ##. SEE PG26 FOR DETAILS.

INSTALL HANGER FRAMES ON MAIN BRIDGE UTILITY SUPPORTS AND CROSS FRAMES. PER MAIN BRIDGE PLANS, MAX SPACING BETWEEN UTILITY SUPPORTS AND/OR CROSS FRAMES = 9'-6"

SEE PROPOSED MAIN BRIDGE PLANS IN SPECIFICATION SECTION 337119.34 FOR FRAMING DETAILS, INCLUDING LOCATIONS OF UTILITY SUPPORTS AND CROSS FRAMES.

CROSS FRAMES AND UTILITY SUPPORTS ARE ONLY SHOWN IN BAY OF PROPOSED DUCTBANK, FOR CLARITY.

CENTERLINES OF BOX GIRDER WEBS ARE SHOWN AT TOP OF WEB.

STATIONING ALONG BASELINE OF BRIDGES SHOWN FOR INFORMATION ONLY, SEE BRIDGE PLANS

0 6' 12' 24'
SCALE IN FEET

NORTH

Know what's below. Call before you dig.

COMMONWEALTH OF MASSACHUSETTS
MICHAEL R. DELGRECO
NO. 55667
REGISTERED PROFESSIONAL ENGINEER

This document has been digitally sealed.
07/02/2021

ISSUED FOR CONSTRUCTION

NO.	DATE	DESIGN REVISIONS	BY	CHK	APP	APP
0	07/02/21	ISSUED FOR CONSTRUCTION	ASF	JMD	-	-

BURNS McDONNELL

129460

date JULY 2, 2021
detailed N. FISCHER
designed A. FERDON
checked J. DAVIS

NO.	DATE	AS BUILT REVISIONS	BY	CHK	APP	APP
–	–	–	–	–	–	–

EVERSOURCE ENERGY

TITLE: NORTH WASHINGTON STREET BRIDGE CABLE REPLACEMENT BRIDGE PLAN SHEET 4 OF 4

BOSTON, MASSACHUSETTS

BY A. FERDON – BMcD	CHKD J.DAVIS – BMcD	APP –	APP –
DATE 07/02/21	DATE	DATE	DATE
H-SCALE 1" = 12'	SIZE D	FIELD BOOK & PAGES	
V-SCALE N/A	V.S.	R.E. DWG	
R.E. PROJ. NUMBER		NUSCO	

PG24

NU_VER: BDR_VER

7/2/2021 11:00 AM – mmfischer – Z:\Clients\TNO\NUSC\129460_NWashSt\Bridge\Design\Underground\CADD\Bridge\PG24_Bridge_Plan_Sheet_4.dwg – North 1

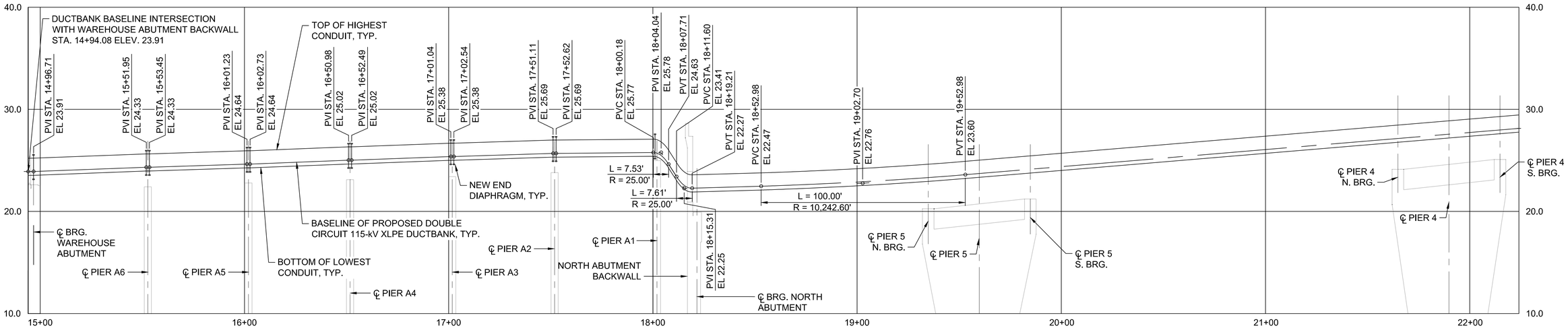

DUCTBANK PROFILE ACROSS BRIDGES

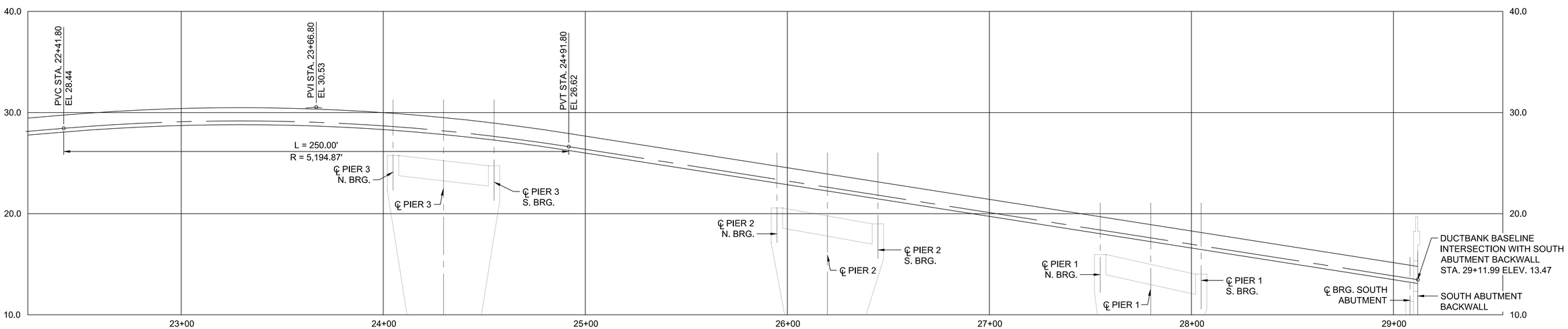

DUCTBANK PROFILE ACROSS BRIDGES

NOTES:
ALL ELEVATIONS ARE REFERENCED TO THE NORTH AMERICAN VERTICAL DATUM OF 1988 (NAVD 88).

0 25' 50'
HORIZONTAL SCALE IN FEET

0 5' 10'
VERTICAL SCALE IN FEET

COMMONWEALTH OF MASSACHUSETTS
MICHAEL R. DEL GREGO
STRUCTURAL
NO. 55667
REGISTERED PROFESSIONAL ENGINEER

This document has been digitally sealed.
07/02/2021

ISSUED FOR CONSTRUCTION

NO.	DATE	DESIGN REVISIONS	BY	CHK	APP	APP
0	07/02/21	ISSUED FOR CONSTRUCTION	ASF	JMD	-	-

BURNS McDONNELL

129460

date JULY 2, 2021
designed A. FERDON
detailed N. FISCHER
checked J. DAVIS

NO.	DATE	AS BUILT REVISIONS	BY	CHK	APP	APP
–	–	–	–	–	–	–

EVERSOURCE ENERGY

TITLE
NORTH WASHINGTON STREET
BRIDGE CABLE REPLACEMENT
BRIDGE PROFILE SHEET
BOSTON, MASSACHUSETTS

BY A. FERDON – BMcD	CHKD J.DAVIS – BMcD	APP –	APP –
DATE 07/02/21	DATE	DATE	DATE
H-SCALE 1" = 25' V-SCALE 1" = 5'	SIZE D	FIELD BOOK & PAGES	
	V.S.	R.E. DWG	
R.E. PROJ. NUMBER		NUSCO	

PG25

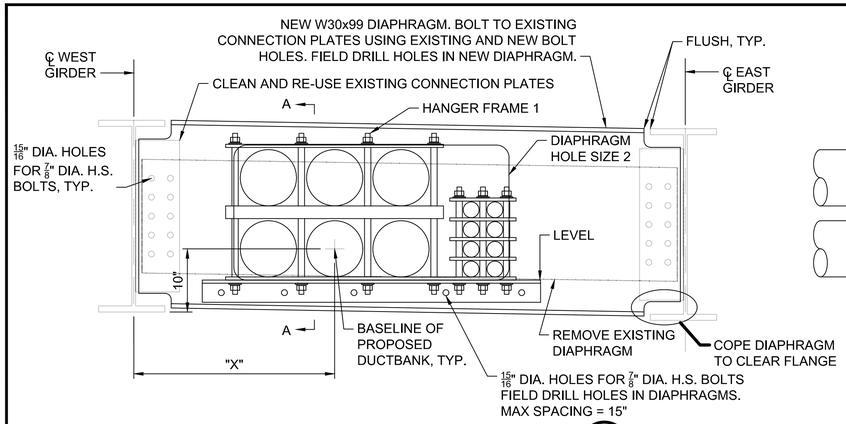

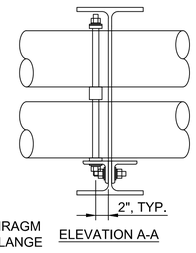

INTERMEDIATE DIAPHRAGM TYPICAL SECTION (D / -)
FACING NORTH. NOT TO SCALE

SEE PG 27 FOR DIAPHRAGM HOLE SIZE DIMENSIONS.

SEE BRIDGE PLAN SHEETS FOR LOCATION OF DIAPHRAGMS "D##". DIMENSION "X" IS MEASURED ALONG THE CENTERLINE OF THE INTERMEDIATE DIAPHRAGM.

DIMENSIONS FOR NEW W30x99 INTERMEDIATE DIAPHRAGM TO BE DETERMINED BY CONTRACTOR USING EXISTING WAREHOUSE BRIDGE PLANS AND FIELD MEASUREMENTS.

INTERMEDIATE DIAPHRAGM	DIMENSION "X"
D01	3'-11 3/8"
D02	3'-10 5/16"
D03	3'-9 1/4"
D04	3'-10 13/16"
D05	3'-4 1/8"
D06	3'-8 1/8"
D07	3'-0 13/16"
D08	3'-6 13/16"
D09	2'-10 1/2"
D10	4'-3 13/16"
D11	3'-9 3/8"
D12	3'-8 9/16"
D13	4'-0 7/8"

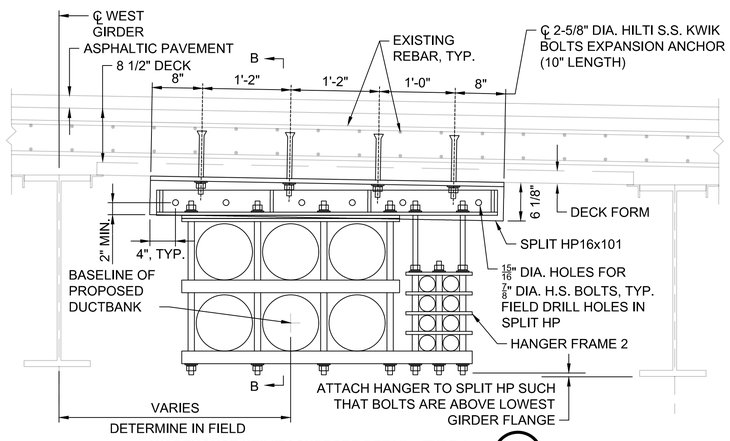

WAREHOUSE UTILITY SUPPORT DETAIL - TYPE 1 (C1 / -)
FACING NORTH. NOT TO SCALE

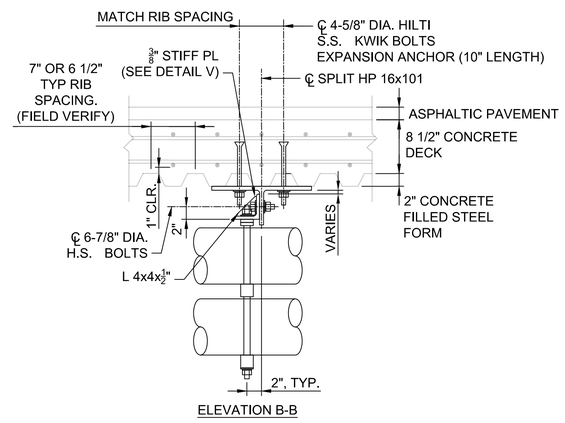

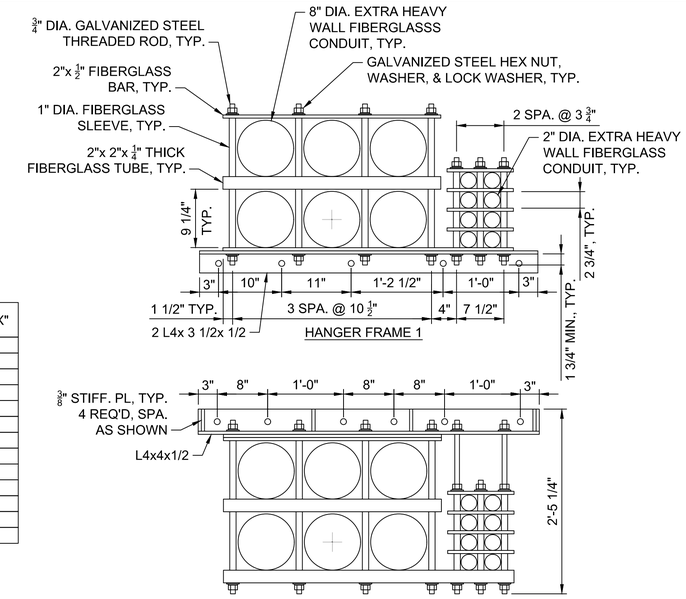

HANGER FRAME 2
HANGER FRAME 2 IS SIMILAR TO HANGER FRAME 1, EXCEPT FOR ALTERNATE BAR AND TUBE ARRANGEMENT, AS SHOWN.

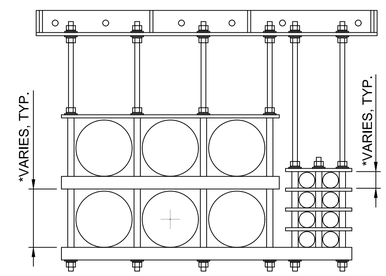

HANGER FRAME 3
HANGER FRAME 3 IS IDENTICAL TO HANGER FRAME 2, EXCEPT FOR ALTERNATE BAR AND TUBE ARRANGEMENT AS SHOWN

NOTES:
SEE EXISTING WAREHOUSE BRIDGE PLANS IN SPECIFICATION SECTION 337119.34 FOR INFORMATION ON EXISTING BEAMS, BEARINGS, PIERS, AND ELEVATIONS. CONTRACTOR SHALL VERIFY ALL DIMENSIONS IN FIELD PRIOR TO ORDERING NEW MATERIAL.

ALL CONDUITS SHALL BE EXTRA HEAVY WALL FIBERGLASS ("BULLET RESISTANT").
HANGER ASSEMBLIES SHALL CONSIST OF FIBERGLASS SQUARE TUBES (2" x2" x 1/4"), ROUND TUBES (THREADED ROD SLEEVES, 1" DIA.), AND 3/4" DIA. GALVANIZED STEEL THREADED RODS, NUTS, WASHERS, AND LOCK WASHERS. CONDUITS AND HANGER ASSEMBLIES SHALL BE CHAMPION FIBERGLASS, OR ENGINEER APPROVED EQUIVALENT.

THREADED ROD, HEX NUTS, FLAT WASHERS, AND LOCK WASHERS SHALL CONFORM TO ASTM A307 AND SHALL BE GALVANIZED IN ACCORDANCE WITH ASTM A153. THREADED ROD SHALL HAVE A MINIMUM TENSILE STRENGTH OF 74,000 PSI.

ALL STRUCTURAL STEEL SHALL CONFORM TO ASTM A709 GRADE 50 AND SHALL BE GALVANIZED AFTER FABRICATION IN ACCORDANCE WITH ASTM A123.

HIGH STRENGTH BOLTS SHALL CONFORM TO A325. BOLTS, NUTS, AND WASHERS SHALL BE GALVANIZED IN ACCORDANCE WITH ASTM A153.

STRUCTURAL STEEL WAREHOUSE UTILITY SUPPORTS SHALL BE FASTENED TO THE EXISTING CONCRETE DECK WITH HILTI KWIK BOLT TZ EXPANSION ANCHORS AS SHOWN IN THE DETAILS. EXPANSION ANCHORS SHALL BE STAINLESS STEEL, TYPE 316. INSTALL A SACRIFICIAL ANCHOR WITHIN 12" OF EACH PROPOSED CONDUIT SUPPORT LOCATION, PRIOR TO INSTALLING ANCHORS FOR CONDUIT HANGERS. CONSULT HILTI FOR MINIMUM ANCHOR EMBEDMENT AND TORQUE REQUIREMENTS IN 4000 PSI CONCRETE. A HILTI REPRESENTATIVE SHALL TEST PULL EACH OF THE SACRIFICIAL ANCHORS FOR A MINIMUM SAFE WORKING PULLOUT CAPACITY OF 2,000 LBS. PER ANCHOR. NOTIFY THE ENGINEER IF ANY SACRIFICIAL ANCHORS FAIL THE PULLOUT TEST. ONCE ALL PULLOUT TESTS ARE SUCCESSFULLY COMPLETED, THE CONDUIT SUPPORT ANCHORS CAN BE INSTALLED. CONTRACTOR SHALL PROVIDE THE ENGINEER WITH WRITTEN VERIFICATION OF ANCHOR PULLOUT TEST RESULTS WITHIN 5 DAYS AFTER TESTS ARE COMPLETED.

CONTRACTOR SHALL VERIFY ALL PHASE CONDUITS PASS THROUGH SINGLE HOLE IN STEEL DIAPHRAGM OR CONCRETE BACKWALL.

*FOR HANGER FRAME 3, CUT FIBERGLASS SLEEVES IN FIELD TO ACHIEVE ADEUQUATE OPENING FOR SLOPED CONDUIT. SEE DETAIL R.

SPLIT HP16x101 SECTIONS SHALL BE SPLIT IN SHOP TO THE DEPTH SHOWN.

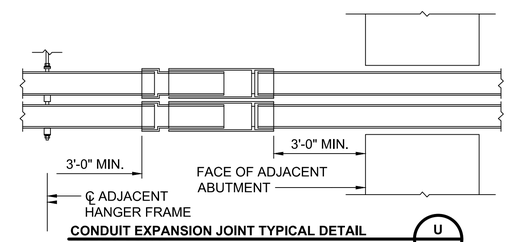

CONDUIT EXPANSION JOINT TYPICAL DETAIL (U / -)
NOT TO SCALE

CONDUIT EXPANSION JOINTS TO BE LOCATED IN THE BAYS SHOWN ON BRIDGE PLAN SHEETS, AT LOCATIONS "E##".

CONTRACTOR TO SELECT EXPANSION JOINT LOCATION WITHIN BAY SUBJECT TO CONSTRAINTS SHOWN IN DETAIL U.

SEE PG29 AND PG30 FOR DETAILS OF ANCHOR SUPPORTS.

EXPANSION JOINT LOCATION	MINIMUM STROKE
E01	4"
E02	4"
E03	4"
E04	4"
E05	14"
E06	6"
E07	6"
E08	6"
E09	6"
E10	6"
E11	6"

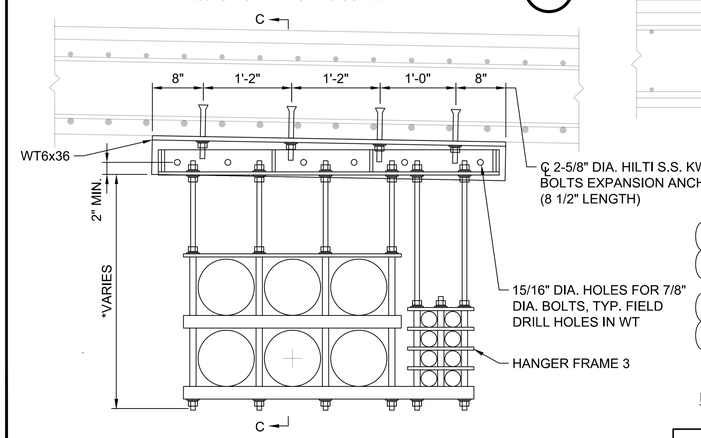

WAREHOUSE UTILITY SUPPORT DETAIL - TYPE 2 (C2 / -)
FACING NORTH. NOT TO SCALE

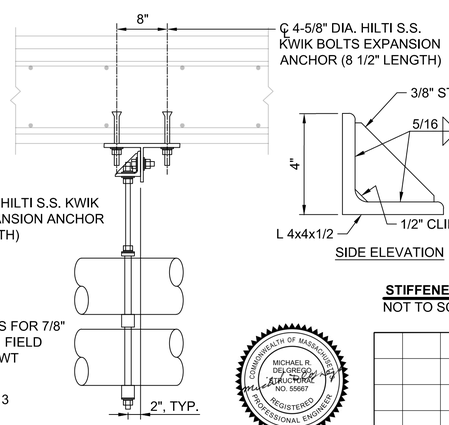

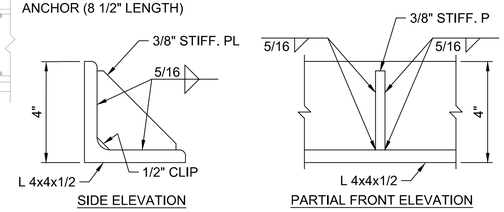

STIFFENER PLATE DETAIL (V / -)
NOT TO SCALE

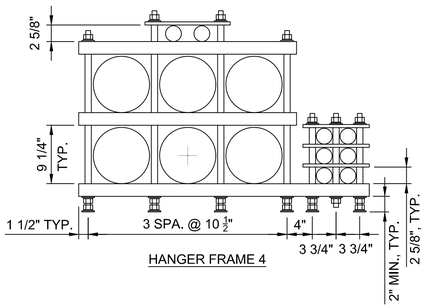

HANGER FRAME 4

COMMONWEALTH OF MASSACHUSETTS
MICHAEL R. DELGREGO
STRUCTURAL
NO. 55667
REGISTERED PROFESSIONAL ENGINEER
This document has been digitally sealed. 07/02/2021

ISSUED FOR CONSTRUCTION

NO.	DATE	DESIGN REVISIONS	BY	CHK	APP	APP
0	07/02/21	ISSUED FOR CONSTRUCTION	ASF	JMD	-	-

NO.	DATE	AS BUILT REVISIONS	BY	CHK	APP	APP
–	–	–	–	–	–	–

BURNS McDONNELL
129460

date JULY 2, 2021	detailed N. FISCHER
designed A. FERDON	checked J. DAVIS

EVERSOURCE ENERGY

TITLE: NORTH WASHINGTON STREET BRIDGE CABLE REPLACEMENT BRIDGE DETAIL SHEET 1 OF 5
BOSTON, MASSACHUSETTS

BY	CHKD	APP	APP
A. FERDON – BMcD	J.DAVIS – BMcD	–	–
DATE 07/02/21	DATE	DATE	DATE

H-SCALE N/A; V-SCALE N/A; SIZE D; FIELD BOOK & PAGES; V.S.; R.E. DWG; R.E. PROJ. NUMBER; MUSCO

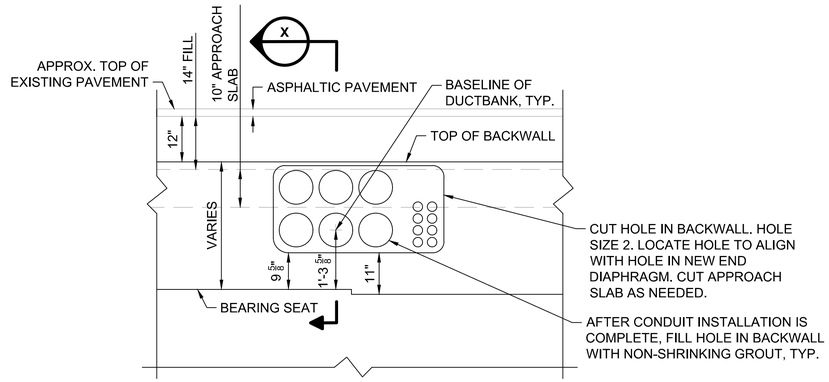

WAREHOUSE ABUTMENT BACKWALL SECTION (A / -)
LOOKING NORTH. NOT TO SCALE

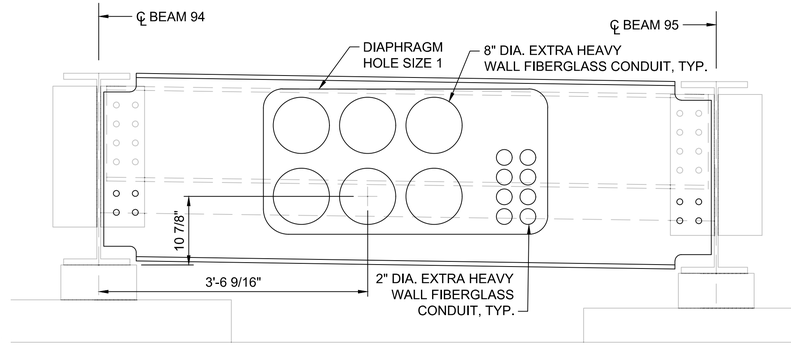

PIER A6 NORTH END DIAPHRAGM SECTION (E / -)
LOOKING NORTH. NOT TO SCALE

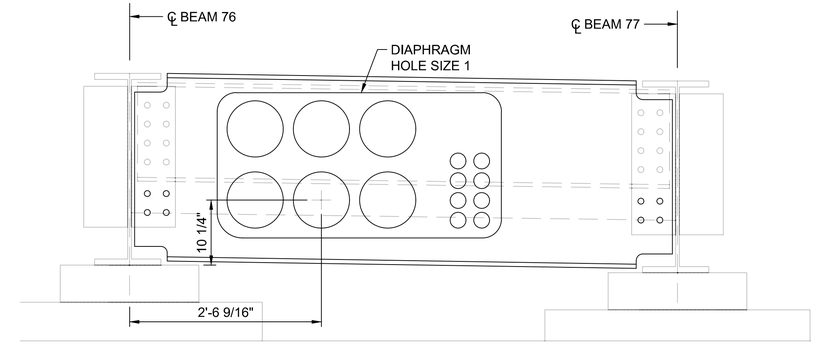

PIER A5 NORTH END DIAPHRAGM SECTION (G / -)
LOOKING NORTH. NOT TO SCALE

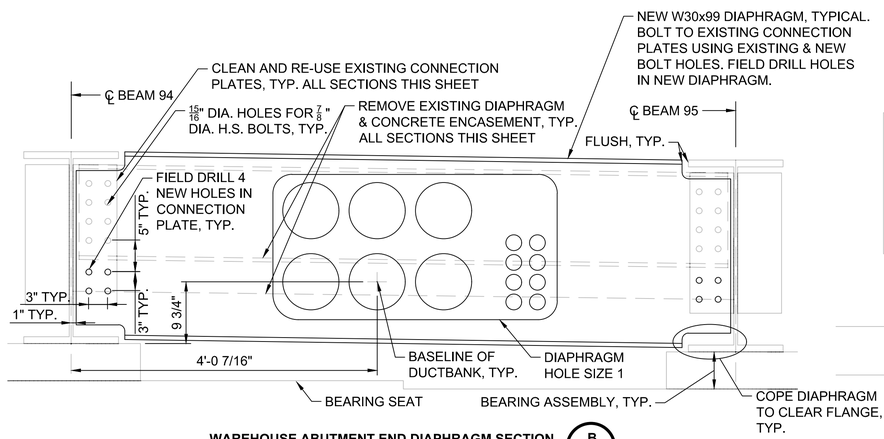

WAREHOUSE ABUTMENT END DIAPHRAGM SECTION (B / -)
LOOKING NORTH. NOT TO SCALE

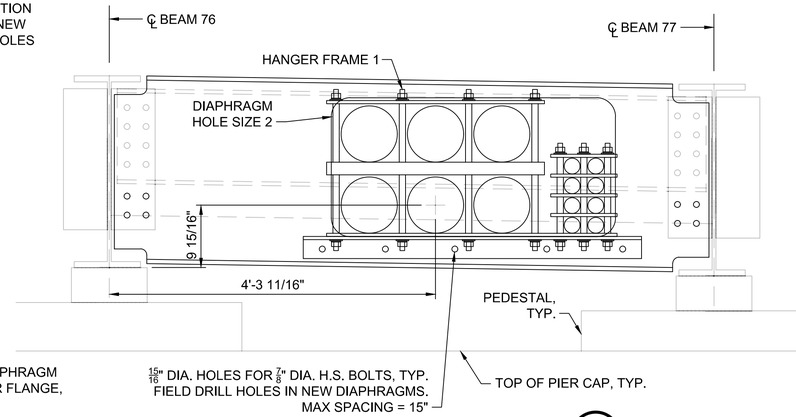

PIER A6 SOUTH END DIAPHRAGM SECTION (F / -)
LOOKING NORTH. NOT TO SCALE

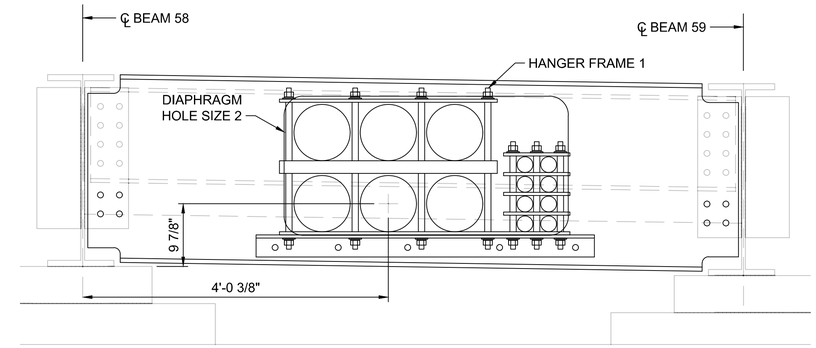

PIER A5 SOUTH END DIAPHRAGM SECTION (H / -)
LOOKING NORTH. NOT TO SCALE

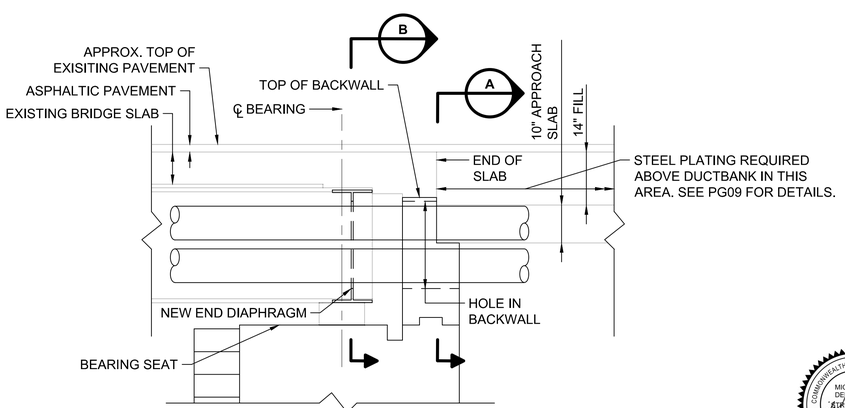

WAREHOUSE ABUTMENT ELEVATION (X / -)
LOOKING WEST. NOT TO SCALE

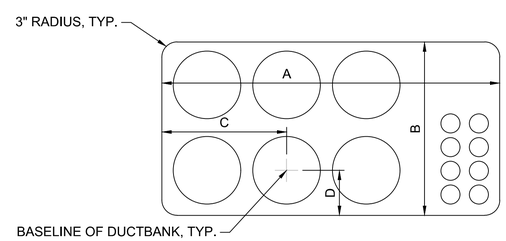

HOLE SIZE	DIM. "A"	DIM. "B"	DIM. "C"	DIM. "D"
1	3'-9"	1'-11"	1'-4 1/2"	6"
2	3'-9"	1'-10"	1'-4 1/2"	5"
3	3'-9"	2'-2"	1'-4 1/2"	VARIES
4	3'-9"	2'-3"	1'-4 1/2"	6"

NOTES:
SEE EXISTING WAREHOUSE BRIDGE PLANS IN SPECIFICATION SECTION 337119.34 FOR INFORMATION ON EXISTING BEAMS, BEARINGS, PIERS, AND ELEVATIONS.

DIMENSIONS AND ELEVATIONS ARE BASED ON EXISTING WAREHOUSE BRIDGE PLANS AND PROPOSED MAIN BRIDGE PLANS. CONTRACTOR SHALL VERIFY ALL DIMENSIONS IN FIELD BEFORE ORDERING NEW MATERIAL.

SEE PG26 FOR HANGER FRAME DETAILS, AND SPECIFICATIONS, AND STRUCTURAL STEEL SPECIFICATIONS.

COMMONWEALTH OF MASSACHUSETTS
MICHAEL R. DELGREGO
STRUCTURAL
NO. 55667
REGISTERED PROFESSIONAL ENGINEER

This document has been digitally sealed.
07/02/2021

ISSUED FOR CONSTRUCTION

NO.	DATE	DESIGN REVISIONS	BY	CHK	APP	APP
0	07/02/21	ISSUED FOR CONSTRUCTION	ASF	JMD	-	-

BURNS McDONNELL
129460

date JULY 2, 2021	detailed N. FISCHER
designed A. FERDON	checked J. DAVIS

NO.	DATE	AS BUILT REVISIONS	BY	CHK	APP	APP
–	–	–	–	–	–	–

EVERSOURCE ENERGY

TITLE
NORTH WASHINGTON STREET
BRIDGE CABLE REPLACEMENT
BRIDGE DETAIL SHEET 2 OF 5
BOSTON, MASSACHUSETTS

BY A. FERDON – BMcD	CHKD J.DAVIS – BMcD	APP –	APP –
DATE 07/02/21	DATE	DATE	DATE
H-SCALE N/A	SIZE D	FIELD BOOK & PAGES	
V-SCALE N/A	V.S.	R.E. DWG	
R.E. PROJ. NUMBER		NUSCO	

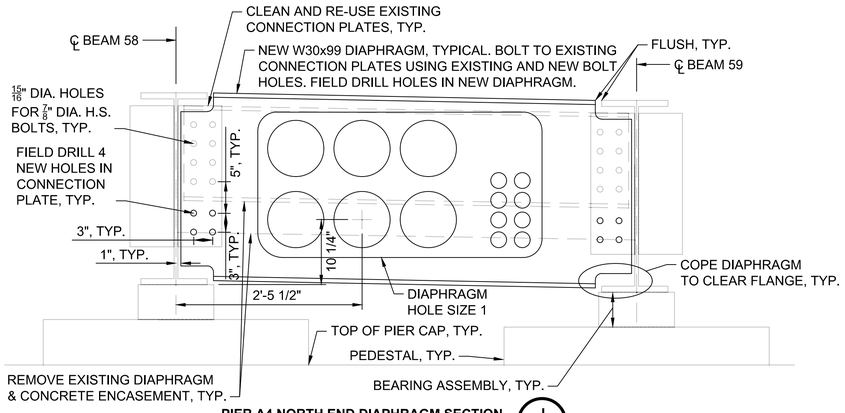

PIER A4 NORTH END DIAPHRAGM SECTION I
LOOKING NORTH. NOT TO SCALE

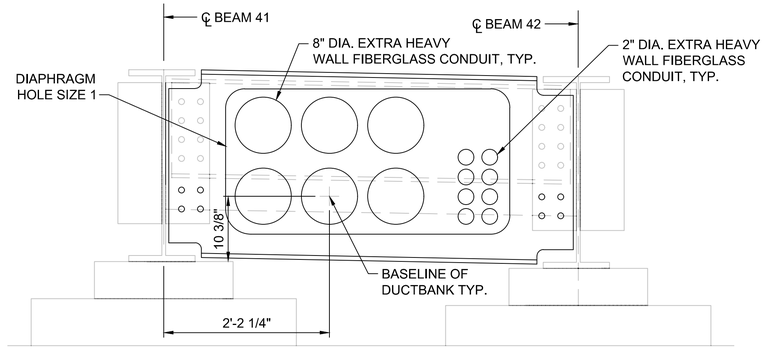

PIER A3 NORTH END DIAPHRAGM SECTION K
LOOKING NORTH. NOT TO SCALE

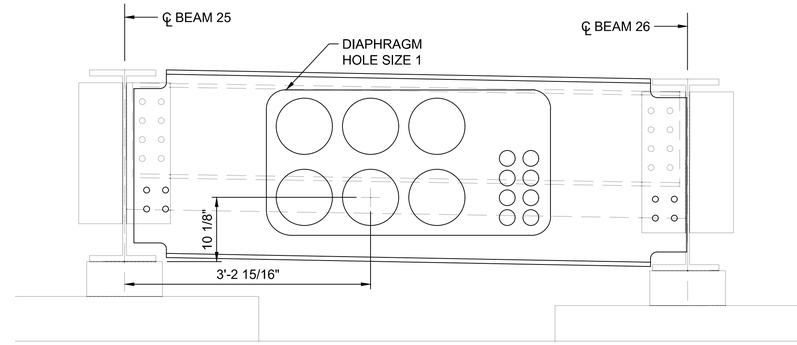

PIER A2 NORTH END DIAPHRAGM SECTION M
LOOKING NORTH. NOT TO SCALE

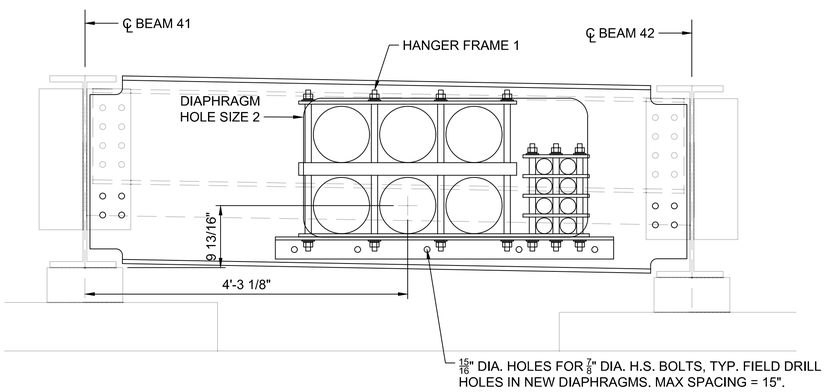

PIER A4 SOUTH END DIAPHRAGM SECTION J
LOOKING NORTH. NOT TO SCALE

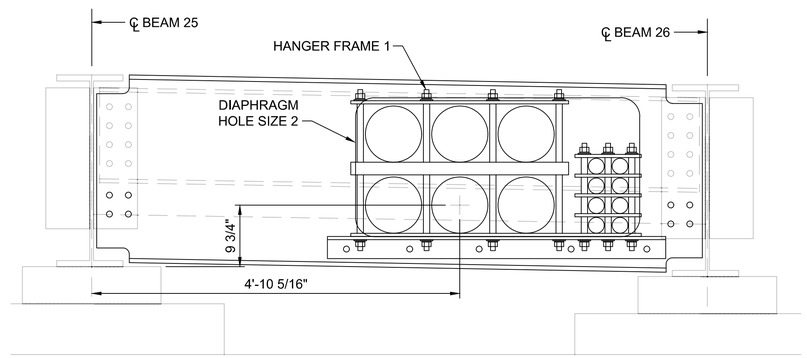

PIER A3 SOUTH END DIAPHRAGM SECTION L
LOOKING NORTH. NOT TO SCALE

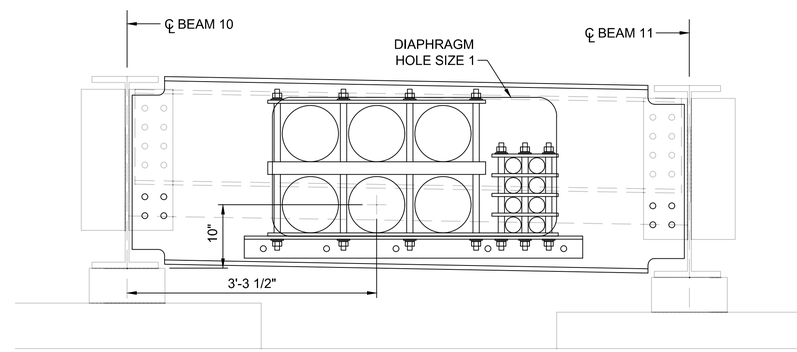

PIER A2 SOUTH END DIAPHRAGM SECTION N
LOOKING NORTH. NOT TO SCALE

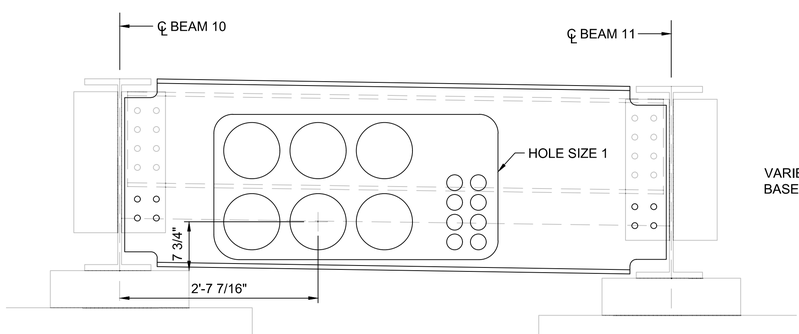

PIER A1 NORTH END DIAPHRAGM SECTION O
LOOKING NORTH. NOT TO SCALE

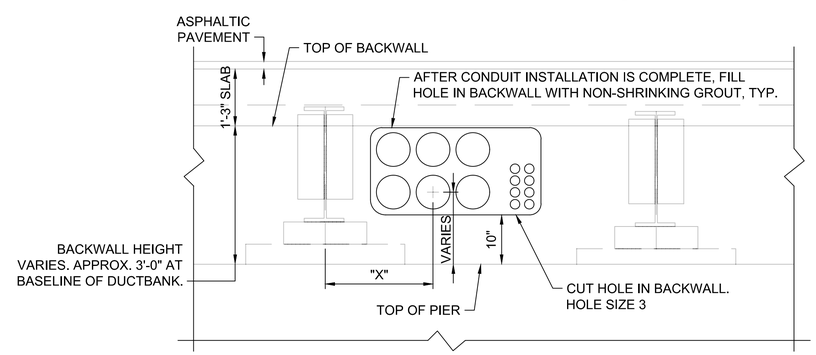

PIER A1 SOUTH BACKWALL SECTION Y
LOOKING NORTH. NOT TO SCALE

DIMENSION "X" =
2'-5 13/16" AT NORTH FACE OF BACKWALL
2'-1 15/16" AT SOUTH FACE OF BACKWALL

NOTES:
DIMENSIONS AND ELEVATIONS ARE BASED ON EXISTING WAREHOUSE BRIDGE PLANS AND PROPOSED MAIN BRIDGE PLANS. CONTRACTOR SHALL VERIFY ALL DIMENSIONS IN FIELD BEFORE ORDERING NEW MATERIAL

SEE EXISTING WAREHOUSE BRIDGE PLANS IN SPECIFICATION SECTION 337119.34 FOR INFORMATION ON EXISTING BEAMS, BEARINGS, PIERS, AND ELEVATIONS.

SEE PG26 FOR HANGER FRAME DETAILS AND SPECIFICATIONS, AND STRUCTURAL STEEL SPECIFICATIONS.

SEE PG26 FOR HOLE SIZE DIMENSIONS.

COMMONWEALTH OF MASSACHUSETTS
MICHAEL R. DELGREGO
STRUCTURAL
NO. 55667
REGISTERED PROFESSIONAL ENGINEER

This document has been digitally sealed.
07/02/2021

ISSUED FOR CONSTRUCTION

NO.	DATE	DESIGN REVISIONS	BY	CHK	APP	APP
0	07/02/21	ISSUED FOR CONSTRUCTION	ASF	JMD	-	-

BURNS McDONNELL
129460

date JULY 2, 2021	detailed N. FISCHER
designed A. FERDON	checked J. DAVIS

NO.	DATE	AS BUILT REVISIONS	BY	CHK	APP	APP
–	–	–	–	–	–	–

EVERSOURCE ENERGY

TITLE
NORTH WASHINGTON STREET
BRIDGE CABLE REPLACEMENT
BRIDGE DETAIL SHEET 3 OF 5
BOSTON, MASSACHUSETTS

BY A. FERDON – BMcD	CHKD J.DAVIS – BMcD	APP –	APP –
DATE 07/02/21	DATE	DATE	DATE
H-SCALE N/A	SIZE D	FIELD BOOK & PAGES	
V-SCALE N/A	V.S.	R.E. DWG	
R.E. PROJ. NUMBER		NUSCO	

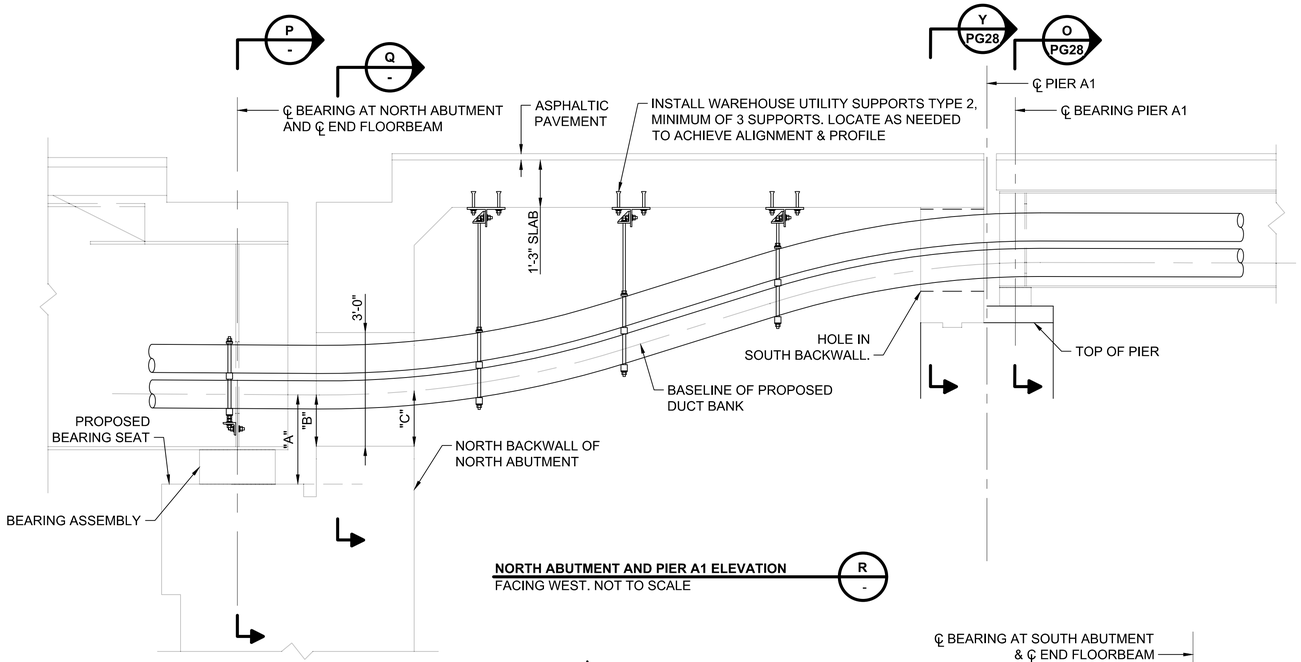

NORTH ABUTMENT AND PIER A1 ELEVATION (R -)
FACING WEST. NOT TO SCALE

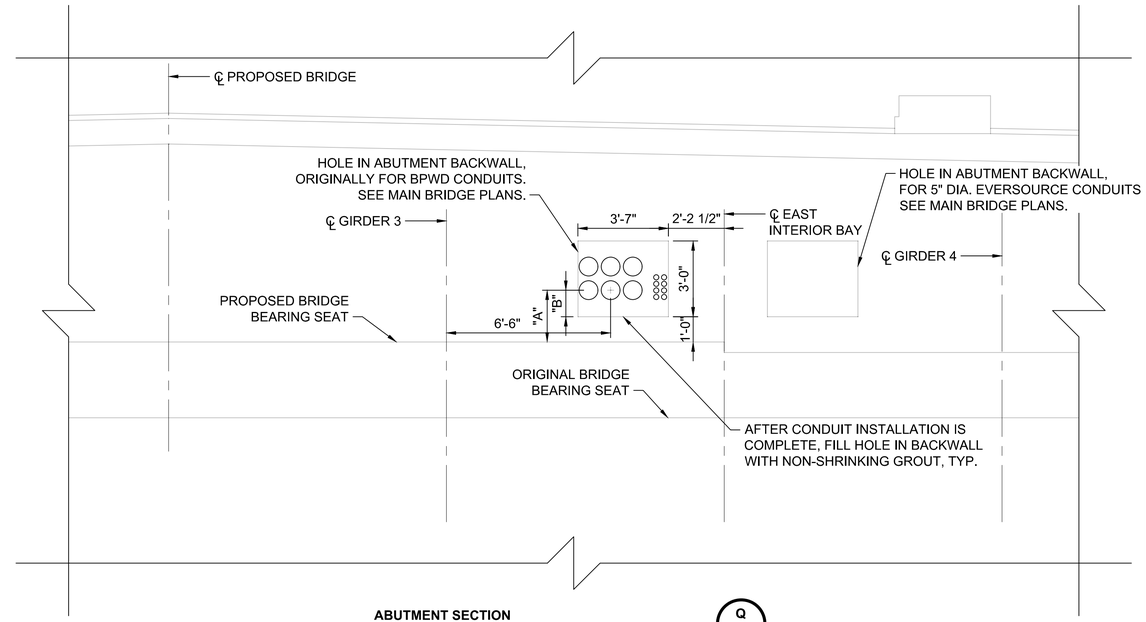

ABUTMENT SECTION (Q -)
NORTH ABUTMENT SHOWN. SOUTH SIMILAR.
FACING NORTH. NOT TO SCALE.

ABUTMENT	PROPOSED BRIDGE BEARING SEAT ELEV.	"A"	"B"	"C"
NORTH	19.92	2'-4 1/4"	1'-4 1/4"	1'-5 1/2"
SOUTH	11.33	2' -2 7/16"	1' -2 7/16"	1' -1 11/16"

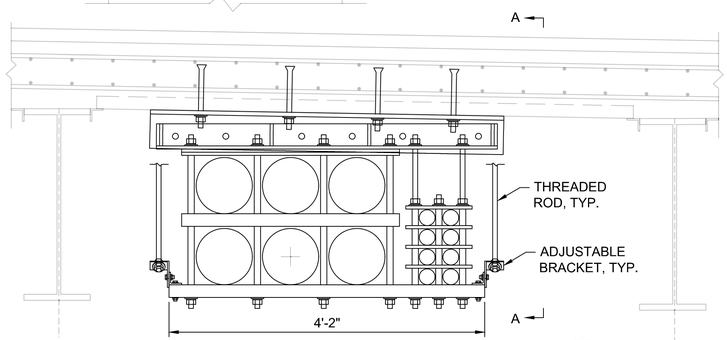

WAREHOUSE BRIDGE UTILITY ANCHOR SUPPORT DETAIL - TYPE 3 (C3 -)
FACING NORTH. NOT TO SCALE.

TYPE 3 SUPPORT IS IDENTICAL TO TYPE 1 SUPPORT, EXCEPT FOR ADDITION OF ANCHOR ASSEMBLY AS SHOWN (SPLIT ANCHOR RINGS, ADJUSTABLE BRACKETS, AND THREADED RODS)

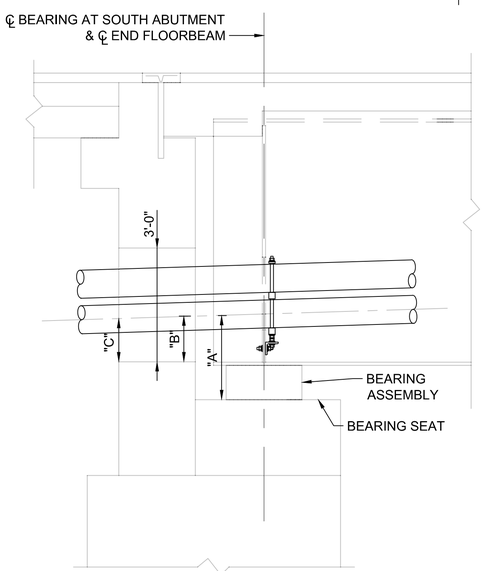

SOUTH ABUTMENT ELEVATION (W -)
FACING WEST. NOT TO SCALE

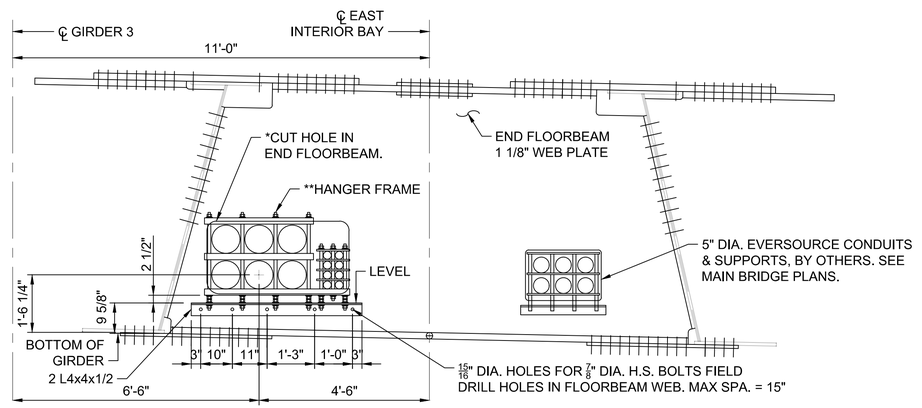

MAIN BRIDGE END FLOORBEAM UTILITY SUPPORT SECTION (P -)
NORTH ABUTMENT SHOWN. SOUTH ABUTMENT & PIERS ARE SIMILAR.
NOT TO SCALE.

*HOLE SIZE 1 AT ABUTMENTS (SHOWN) HOLE SIZE 4 AT PIERS (NOT SHOWN)
**USE HANGER FRAME 7 AT ABUTMENTS (SHOWN) USE HANGER FRAME 4 AT PIERS (NOT SHOWN)

HANGER FRAME 7 IS IDENTICAL TO HANGER FRAME 4, EXCEPT FOR ALTERNATE BAR AND TUBE ARRANGEMENT SHOWN.

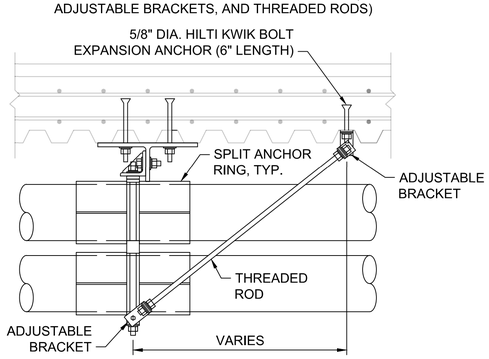

ELEVATION A-A

SPLIT ANCHOR RINGS, ADJUSTABLE BRACKETS, AND THREADED RODS FOR ANCHOR SUPPORTS SHALL BE SUPPLIED BY CHAMPION FIBERGLASS, OR ENGINEER APPROVED EQUIVALENT. CONTRACTOR SHALL SUBMIT SHOP DRAWINGS OF ANCHOR SUPPORTS TO ENGINEER FOR APPROVAL.

SPLIT ANCHOR RINGS SHALL BE BONDED WITH EPOXY RESIGN TO CONDUITS, IN ACCORDANCE WITH MANUFACTURER SPECIFICATIONS.

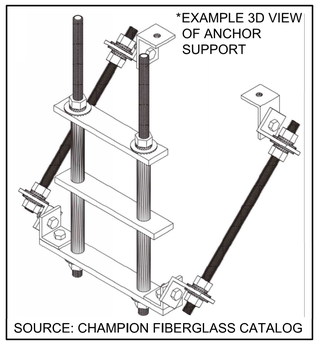

SOURCE: CHAMPION FIBERGLASS CATALOG

*EXAMPLE 3D VIEW IS SHOWN FOR REFERENCE ONLY. HANGER FRAME CONFIGURATIONS SHALL BE AS SHOWN IN THESE PLANS.

NOTES:
SEE PROPOSED MAIN BRIDGE PLANS IN SPECIFICATION SECTION 337119.34 FOR INFORMATION ON BOX GIRDERS, UTILITY SUPPORTS, CROSS FRAMES, BEARINGS, PIERS, AND ELEVATIONS. CONTRACTOR SHALL VERIFY ALL DIMENSIONS IN FIELD PRIOR TO ORDERING NEW MATERIAL.

COMMONWEALTH OF MASSACHUSETTS
MICHAEL R. DELGREGO
STRUCTURAL
NO. 55667
REGISTERED PROFESSIONAL ENGINEER

This document has been digitally sealed.
07/02/2021

ISSUED FOR CONSTRUCTION

NO.	DATE	DESIGN REVISIONS	BY	CHK	APP	APP
0	07/02/21	ISSUED FOR CONSTRUCTION	ASF	JMD	-	-

BURNS McDONNELL

129460

date JULY 2, 2021	detailed N. FISCHER
designed A. FERDON	checked J. DAVIS

NO.	DATE	AS BUILT REVISIONS	BY	CHK	APP	APP
–	–	–	–	–	–	–

EVERSOURCE ENERGY

TITLE
NORTH WASHINGTON STREET
BRIDGE CABLE REPLACEMENT
BRIDGE DETAIL SHEET 4 OF 5
BOSTON, MASSACHUSETTS

BY A. FERDON – BMcD	CHKD J.DAVIS – BMcD	APP –	APP –
DATE 07/02/21	DATE	DATE	DATE
H-SCALE N/A	SIZE D	FIELD BOOK & PAGES	
V-SCALE N/A	V.S.	R.E. DWG	
R.E. PROJ. NUMBER		NUSCO	

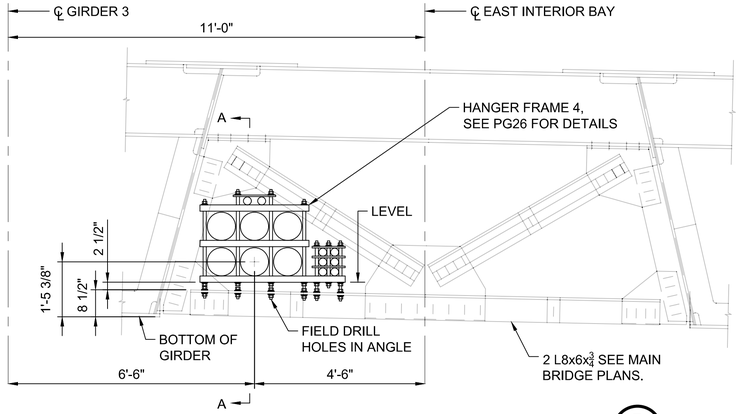

MAIN BRIDGE CROSS FRAME UTILITY SUPPORT SECTION (T / -)
FACING NORTH. NOT TO SCALE.

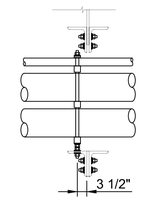

ELEVATION A-A

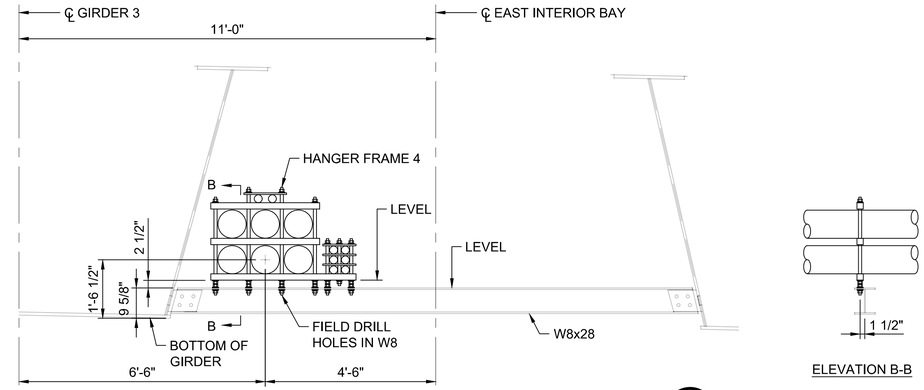

ELEVATION B-B

MAIN BRIDGE TYPE S1 UTILITY SUPPORT SECTION (S1 / -)
FACING NORTH. NOT TO SCALE.

ALL UTILITY SUPPORTS ON MAIN BRIDGE USE TYPE S1, EXCEPT FOR LOCATIONS NEAR THE NORTH AND SOUTH ABUTMENTS MARKED S2, S3, OR S4. SEE BRIDGE PLAN SHEETS FOR LOCATIONS.

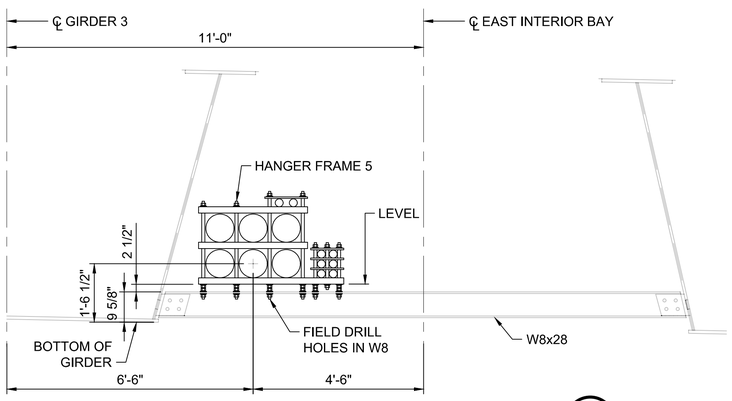

MAIN BRIDGE TYPE S2 UTILITY SUPPORT SECTION (S2 / -)
FACING NORTH. NOT TO SCALE.

TYPE S2 IS IDENTICAL TO S1, EXCEPT FOR REVISED CONDUIT, BAR, AND TUBE CONFIGURATION SHOWN IN HANGER FRAME 5.

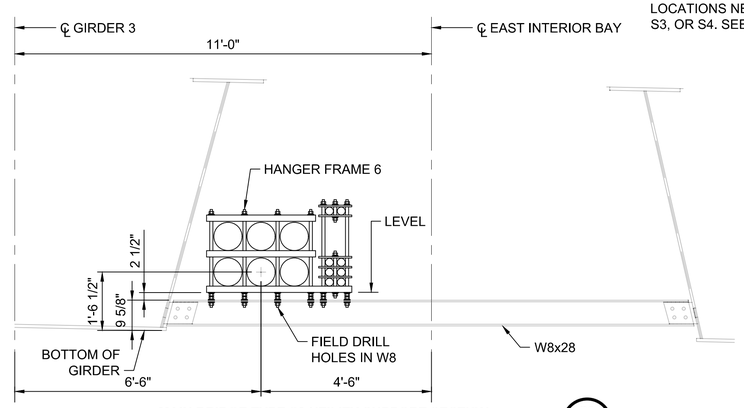

MAIN BRIDGE TYPE S3 UTILITY SUPPORT SECTION (S3 / -)
FACING NORTH. NOT TO SCALE.

TYPE S3 IS IDENTICAL TO S1, EXCEPT FOR REVISED CONDUIT, BAR, AND TUBE CONFIGURATION SHOWN IN HANGER FRAME 6.

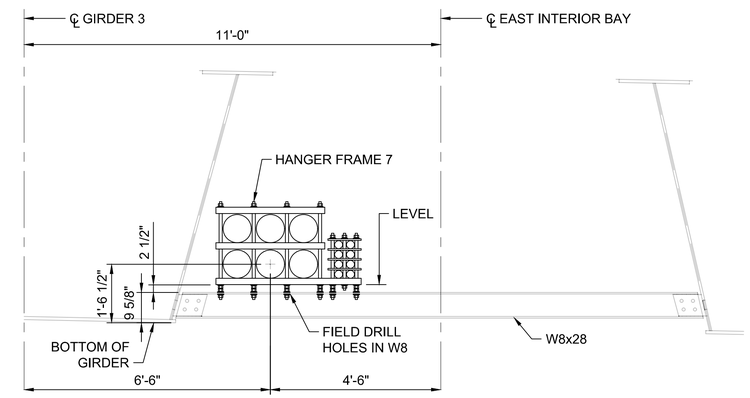

MAIN BRIDGE TYPE S4 UTILITY SUPPORT SECTION (S4 / -)
FACING NORTH. NOT TO SCALE.

TYPE S4 IS IDENTICAL TO S1, EXCEPT FOR REVISED CONDUIT, BAR, AND TUBE CONFIGURATION SHOWN IN HANGER FRAME 7.

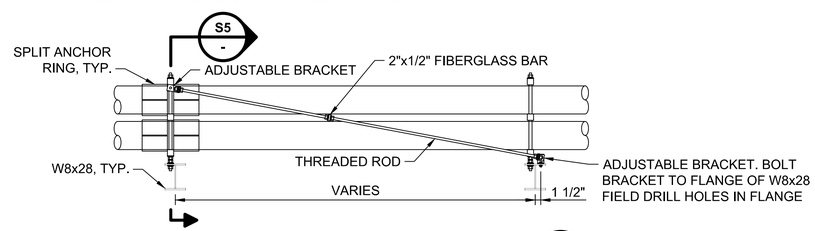

MAIN BRIDGE TYPE S5 UTILITY ANCHOR SUPPORT PROFILE (Z / -)
NOT TO SCALE.

SPLIT ANCHOR RINGS, ADJUSTABLE BRACKETS, AND THREADED RODS FOR ANCHOR SUPPORTS SHALL BE SUPPLIED BY CHAMPION FIBERGLASS, OR ENGINEER APPROVED EQUIVALENT. CONTRACTOR SHALL SUBMIT SHOP DRAWINGS OF ANCHOR SUPPORTS TO ENGINEER FOR APPROVAL.

SPLIT ANCHOR RINGS SHALL BE BONDED WITH EPOXY RESIGN TO CONDUITS, IN ACCORDANCE WITH MANUFACTURER EPECIFICATIONS.

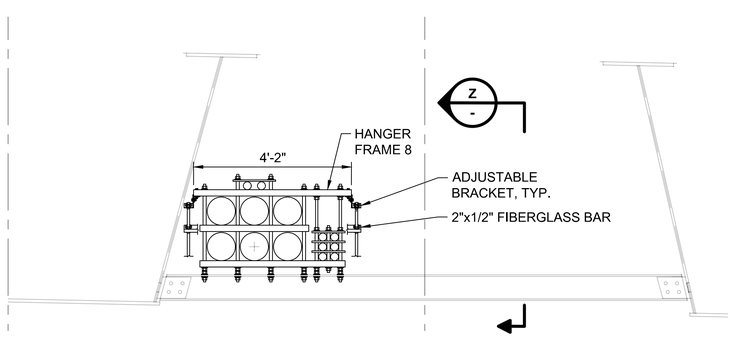

MAIN BRIDGE TYPE S5 UTILITY ANCHOR SUPPORT SECTION (S5 / -)
FACING NORTH. NOT TO SCALE.

TYPE S5 IS SIMILAR TO S1, EXCEPT FOR ADDITION OF ANCHOR BRACKETS & RODS AND REVISED BAR AND TUBE CONFIGURATION SHOWN IN HNAGER FRAME 8.

NOTES:
SEE PROPOSED MAIN BRIDGE PLANS IN SPECIFICATION SECTION 337119.34 FOR INFORMATION ON BOX GIRDERS, UTILITY SUPPORTS, CROSS FRAMES, BEARINGS, PIERS, AND ELEVATIONS. CONTRACTOR SHALL VERIFY ALL DIMENSIONS IN FIELD PRIOR TO ORDERING NEW MATERIAL.

COMMONWEALTH OF MASSACHUSETTS
MICHAEL R. DELGREGO
EXPIRES 12/31/2021
NO. 55667
REGISTERED PROFESSIONAL ENGINEER

This document has been digitally sealed.
07/02/2021

ISSUED FOR CONSTRUCTION

NO.	DATE	DESIGN REVISIONS	BY	CHK	APP	APP
0	07/02/21	ISSUED FOR CONSTRUCTION	ASF	JMD	-	-

NO.	DATE	AS BUILT REVISIONS	BY	CHK	APP	APP
–	–	–	–	–	–	–

BURNS McDONNELL
129460

date JULY 2, 2021	detailed N. FISCHER
designed A. FERDON	checked J. DAVIS

EVERSOURCE ENERGY

TITLE
NORTH WASHINGTON STREET
BRIDGE CABLE REPLACEMENT
BRIDGE DETAIL SHEET 5 OF 5
BOSTON, MASSACHUSETTS

BY A. FERDON – BMcD	CHKD J.DAVIS – BMcD	APP –	APP –
DATE 07/02/21	DATE	DATE	DATE
H-SCALE N/A	SIZE D	FIELD BOOK & PAGES	
V-SCALE N/A	V.S.	R.E. DWG	
R.E. PROJ. NUMBER		NUSCO	

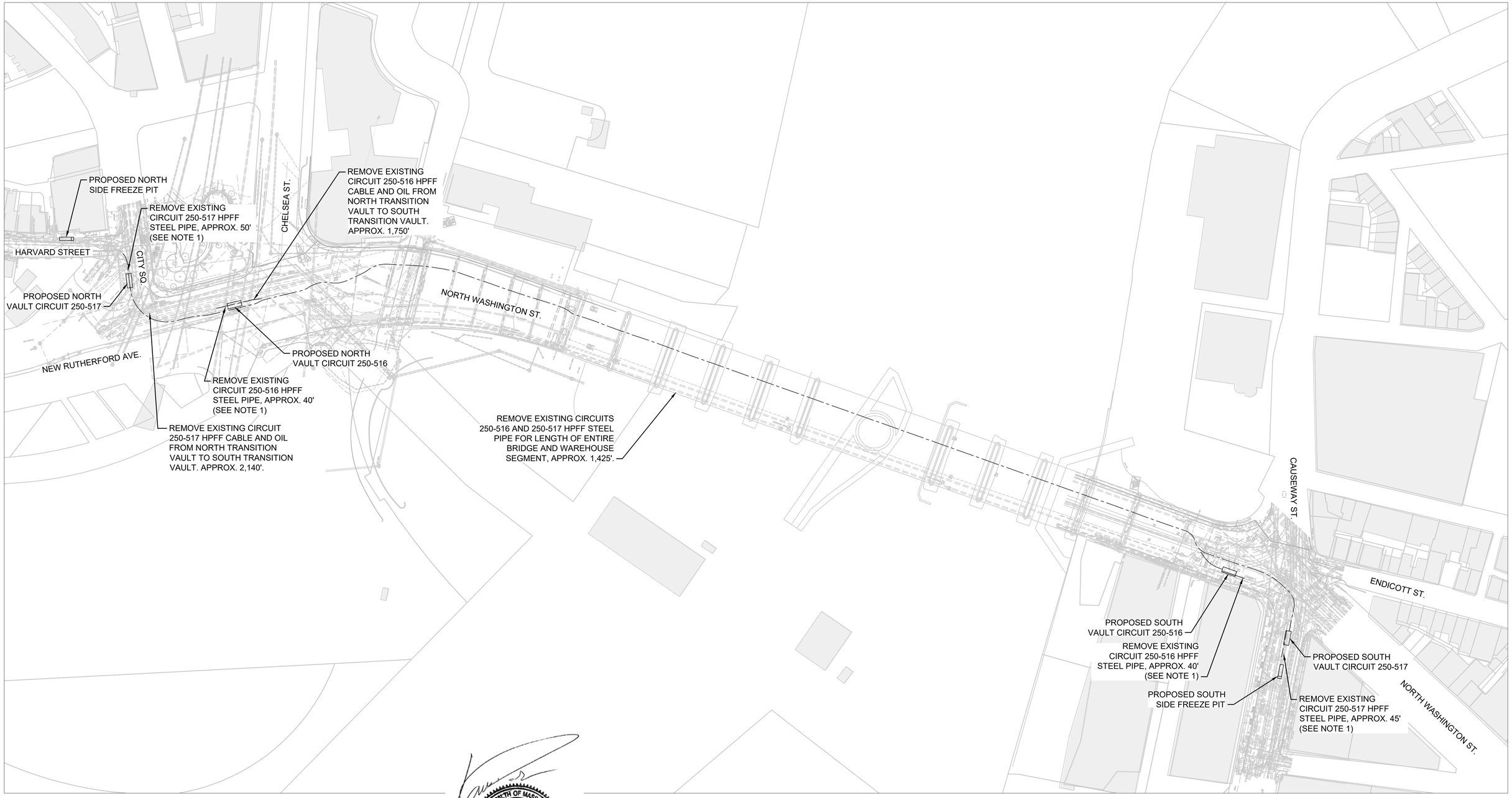

NOTES:

1. OIL TO BE REMOVED FROM FREEZE PIT. EXISTING CABLE TO REMAIN IN PLACE AND TO BE REUSED. EXISTING STEEL PIPE TO BE REMOVED, AS REQUIRED TO ACCOMODATE NEW HPFF STEEL PIPE.

0 40' 80' 160'
HORIZONTAL SCALE IN FEET

NORTH

811 Know what's below. Call before you dig.

COMMONWEALTH OF MASSACHUSETTS
LANE PATRICK PULS
CIVIL
No. 48318
REGISTERED PROFESSIONAL ENGINEER
7-2-2021

ISSUED FOR CONSTRUCTION

NO.	DATE	DESIGN REVISIONS	BY	CHK	APP	APP
0	7/2/21	ISSUED FOR CONSTRUCTION	JAS	MJD	-	-

BURNS McDONNELL

129460

date JAN. 22, 2021
detailed J. SCHATZ
designed M.DAGENAIS
checked N.SCOTT

NO.	DATE	AS BUILT REVISIONS	BY	CHK	APP	APP
–	–	–	–	–	–	–

EVERSOURCE ENERGY

TITLE
NORTH WASHINGTON STREET
BRIDGE CABLE REPLACEMENT
REMOVAL PLAN
BOSTON, MASSACHUSETTS

BY	CHKD	APP	
J. SCHATZ – BMcD	M.DAGENAIS – BMcD	N.SCOTT – BMcD	–
DATE	DATE	DATE	DATE

H-SCALE 1" = 80'
V-SCALE N/A
SIZE D
V.S. D
FIELD BOOK & PAGES
R.E. DWG
R.E. PROJ. NUMBER
NUSCO

PG31

NU_VER: BDR_VER

7/1/2021 1:29 PM – jaschatz – \\bmcd\dfs\Clients\TND\NUSC\129460_NWashSt\Bridge\Design\Underground\CADD\Working\REMOVAL PLAN.dwg – Sheet Layout