809
Please use other door

Andre's Café
PUBLIC ALLEY 719

PUBLIC ALLEY 719
Andre's Café
TOW ZONE
NO
STOPPING
ANY
TIME

PORTAL INC.

10 TRACY DRIVE- AVON, MA. 02322

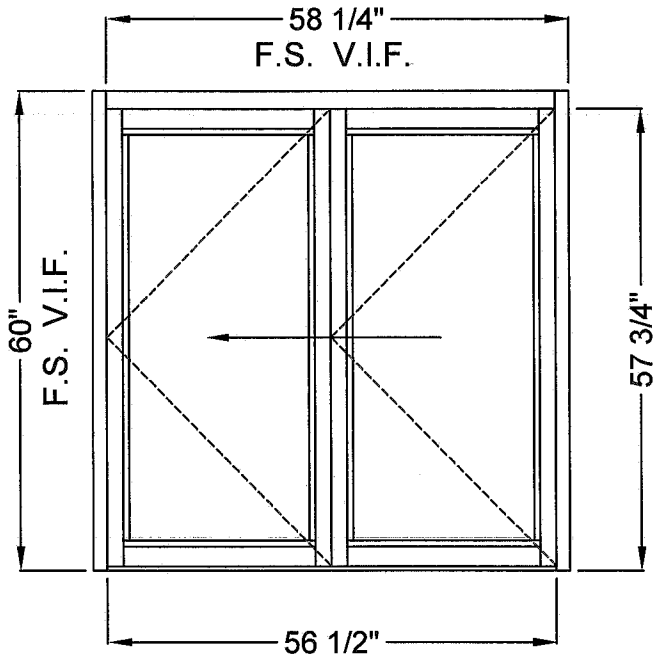

(2-REQ'D.)

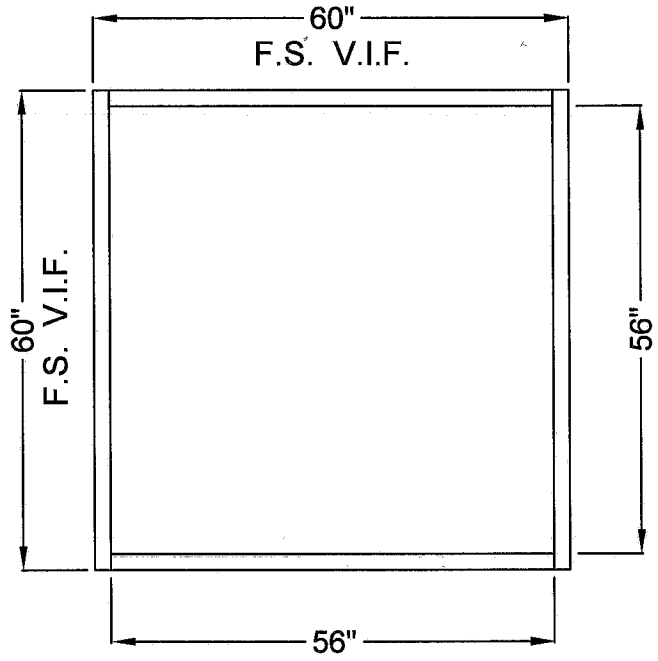

(2-REQ'D.)

PORTAL INC.

10 TRACY DRIVE- AVON, MA. 02322

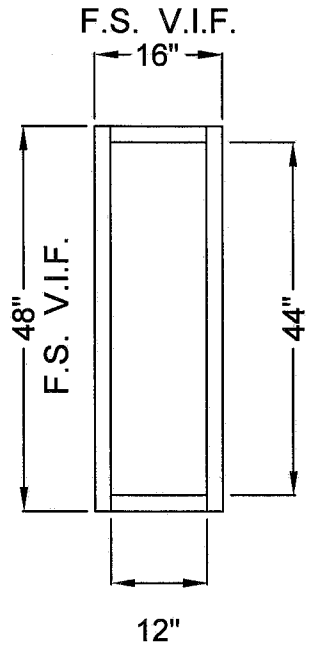

(2-REQ'D.)

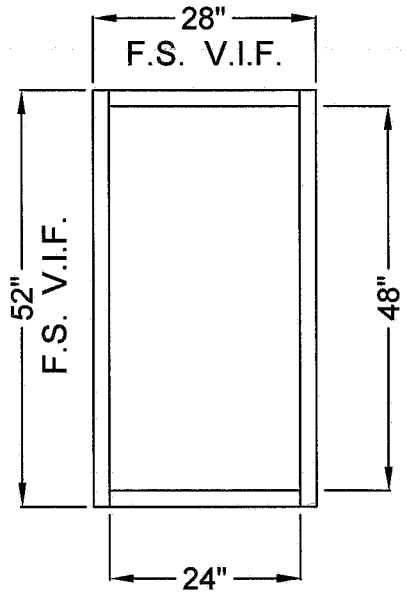

(2-REQ'D.)

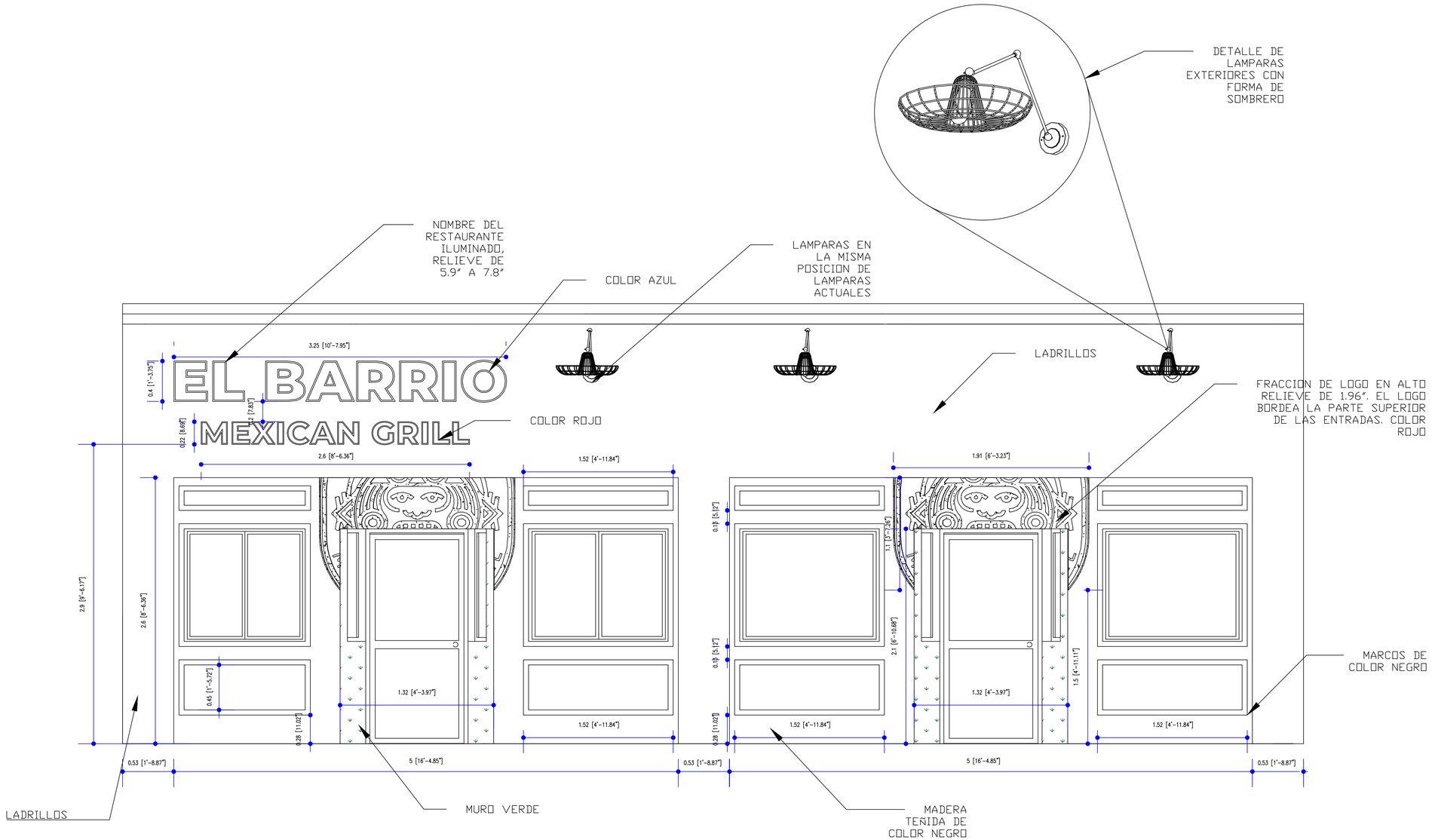

DETALLES DE FACHADA

KIMEA ARQUITECTURA

PROYECTO

RESTAURANTE MEXICANO

PROPIETARIO:

CONTENIDO:

DETALLES DE FACHADA

DIBUJO ARQ.: ARQ. KIARA MELO

DISEÑO ARQ.: ARQ. KIARA MELO

FECHA:

ESCALA:

PAGINA:

Shepton st
EL BARRIO
MEXICAN GRILL
Sea Breeze
Mexican Grill
A
1782

108 inches
EL BARRIO
11.55"
MEXICAN GRILL
5.23"
70 inches
Watermark of the Logo printed over Background
Simulated Wood Printed Acrylic Background

24.5x30 Inches
Blade Sign
Oval Modification

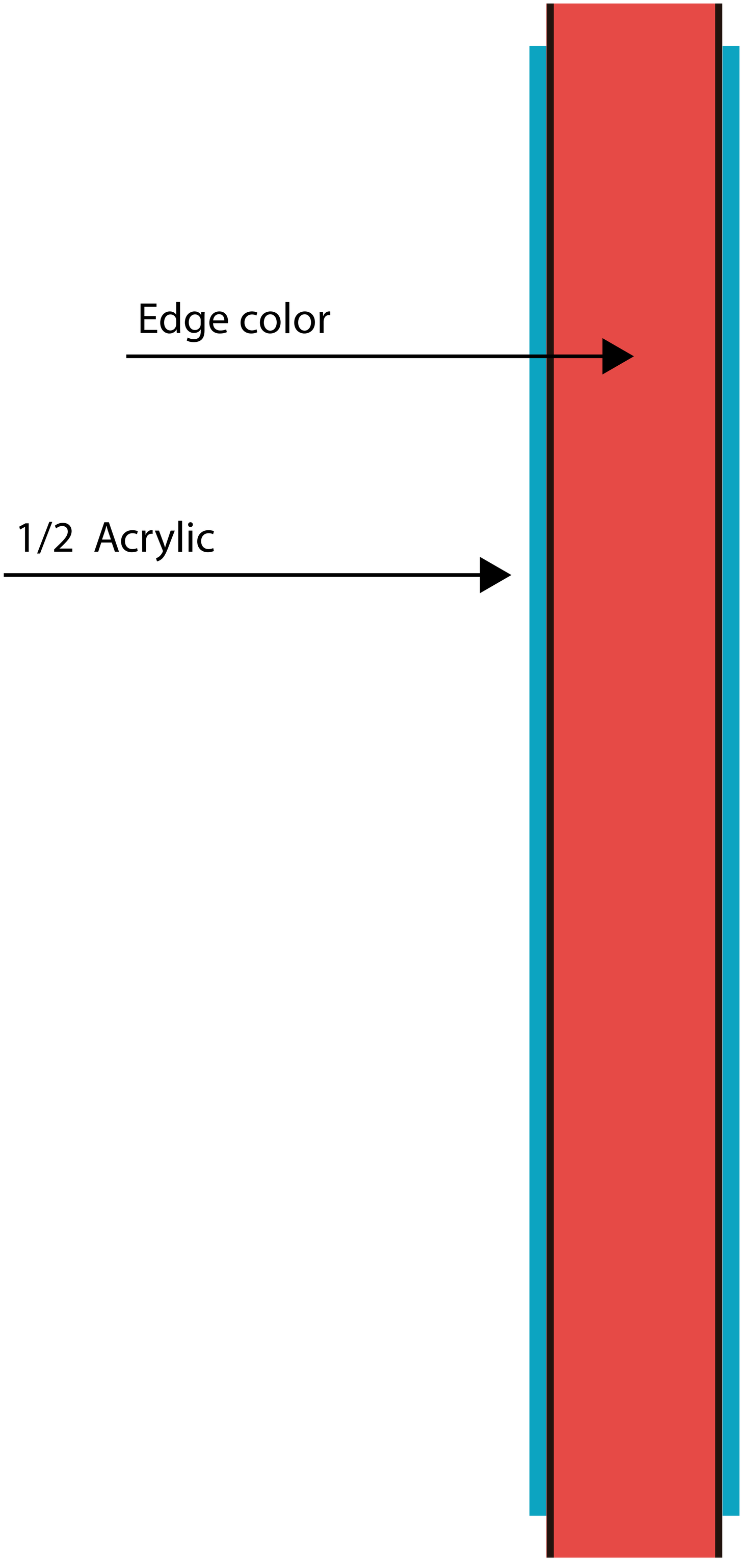

Side View Detail

PANTONE
16-4427 TCX