Mt Vernon Press
Mt Vernon St
Mt Vernon St
Mt Vernon St
Mt Vernon St
Mt Vernon St
Walnut St
Joy St
Joy St
Joy St
Appalachian Mountain Club
Chestnut St
Chestnut St
Chestnut St
Walnut St
Walnut St
Beacon Hill Friends House
Wadsworth Pl
Bollard Group
Joy Pl
Joy St
Joy St
At Home Veterinary
Beacon St
Beacon St
Beacon St
Beacon St
Santander Bank ATM
ATM
Bloomberg
Joy St
The Engineering Center Education Trust
Walnut St
Beacon St
Google

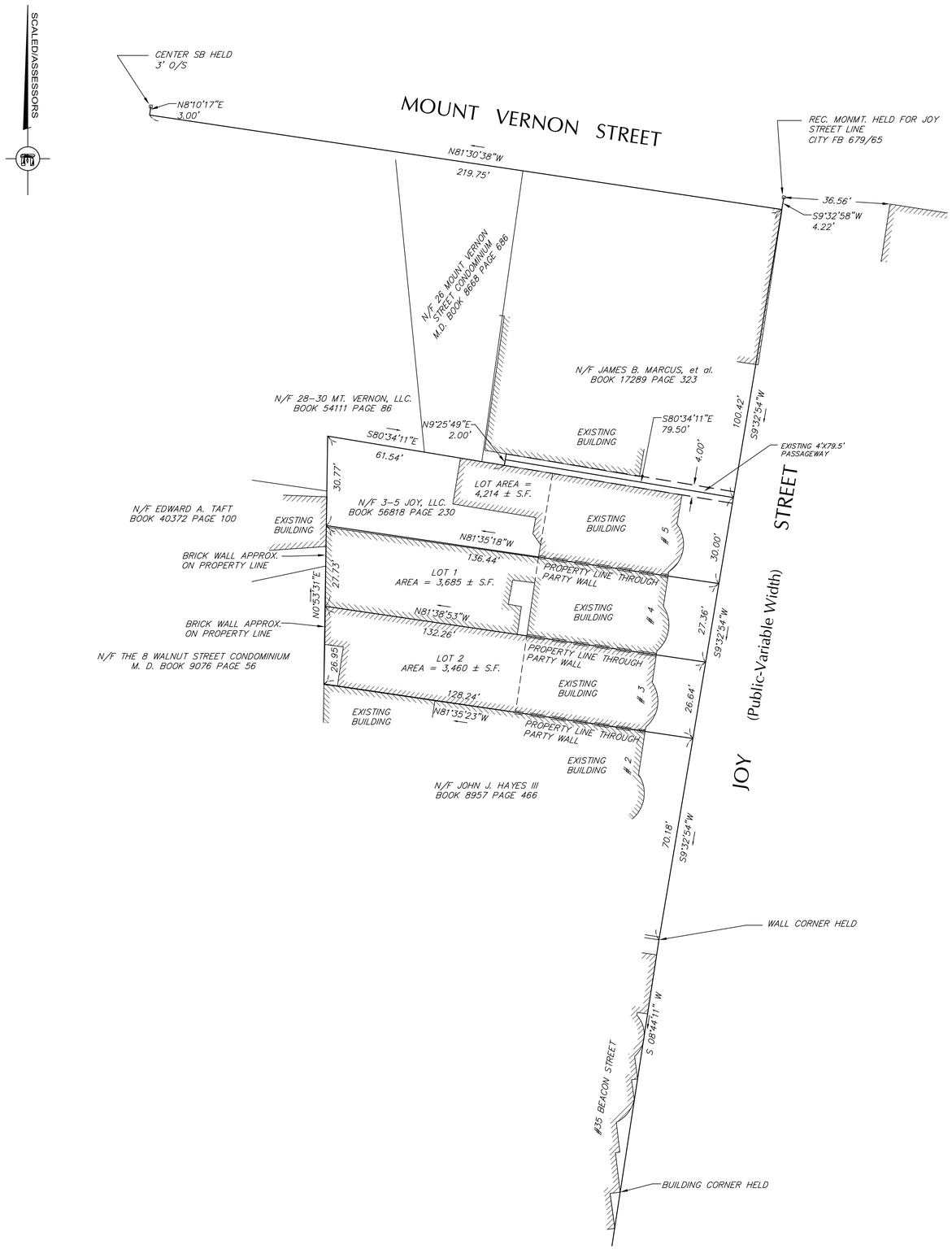

FOR REGISTRY USE ONLY

I CERTIFY THAT THIS PLAN CONFORMS WITH THE RULES AND REGULATIONS OF THE REGISTER OF DEEDS IN THE COMMONWEALTH OF MASSACHUSETTS

CLAUDIO SALA., PLS DATE

PLAN REFERENCES:

SUFFOLK COUNTY REGISTRY OF DEEDS

PLAN BOOK 24068 PAGE END
PLAN BOOK 7646 PAGE 552
PLAN BOOK 7775 PAGE END
PLAN BOOK 9076 PAGE 56
PLAN BOOK 5350 PAGE 210
PLAN BOOK 7274 PAGE 245

BOSTON ENGINEERING RECORDS

BOSTON FIELD BOOK 596 PAGE 52-55
BOSTON FIELD BOOK 679 PAGE 64-65

GENERAL NOTES:

1. LOCUS:

ASSESSORS: WARD 5, PARCEL 1600
WARD 5, PARCEL 1601

RECORD OWNER: 3-5 JOY LLC
DEED REFERENCE: BOOK 56818 PAGE 224
BOOK 56818 PAGE 227
BOOK 56818 PAGE 230

PLAN REFERENCE: N/A

2. THIS PLAN IS THE RESULT OF AN ON THE GROUND SURVEY PERFORMED BY THIS OFFICE IN OCTOBER AND NOVEMBER 2016.

3. THE PURPOSE OF THIS PLAN IS TO RE-ESTABLISH THE LOT LINE FORMERLY REMOVED BETWEEN #3 AND #4 JOY STREET.

4. NO DETERMINATION OF ZONING COMPLIANCE IS INTENDED OR IMPLIED BY THIS PLAN.

DeCELLE
BURKE
& Associates, Inc.
1266 Furnace Brook Parkway, Suite 401 Quincy, MA 02169
(617) 405-5100 (O) (617) 405-5101 (F)

PROJECT TITLE & LOCATION:

PLAN OF LAND
3-4 JOY STREET
BOSTON, MA

PLAN TITLE:

SUBDIVISION PLAN

PREPARED FOR:

BRIAN GATNIK
3-5 JOY LLC
60 ADAMS STREET, 3RD FLOOR
MILTON, MA 02186

DATE: DECEMBER 9, 2016

REVISED:

JOB NUMBER: 16.051 SHEET 1 OF 1

20 10 0 20 40
SCALE: 1"=20'

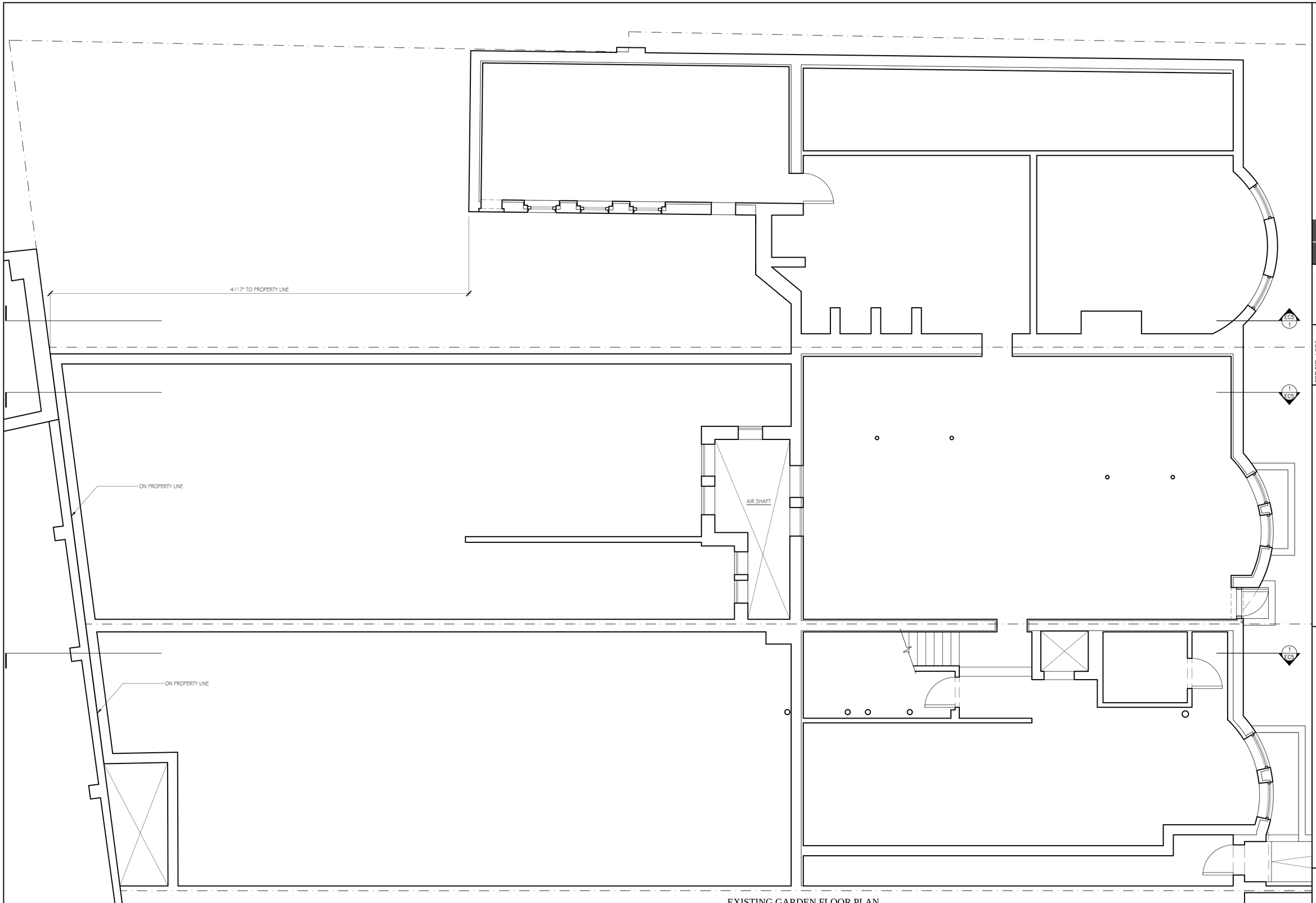

EXISTING GARDEN FLOOR PLAN
SCALE: 1/4"=1'-0"

GRASSI DESIGN GROUP
46 Waltham Street, Suite 3A
Boston, MA 02118
Phone 617-956-9992
Fax 917-956-9993
BEAUCHEMIN GRASSI INTERIORS

JOB NO.: 1606
SCALE: 1/4"= 1'-0"
DATE: 01.04.17
REVISED

3-5 JOY STREET
BOSTON, MA

EXISTING BASEMENT
FLOOR PLAN

EC1

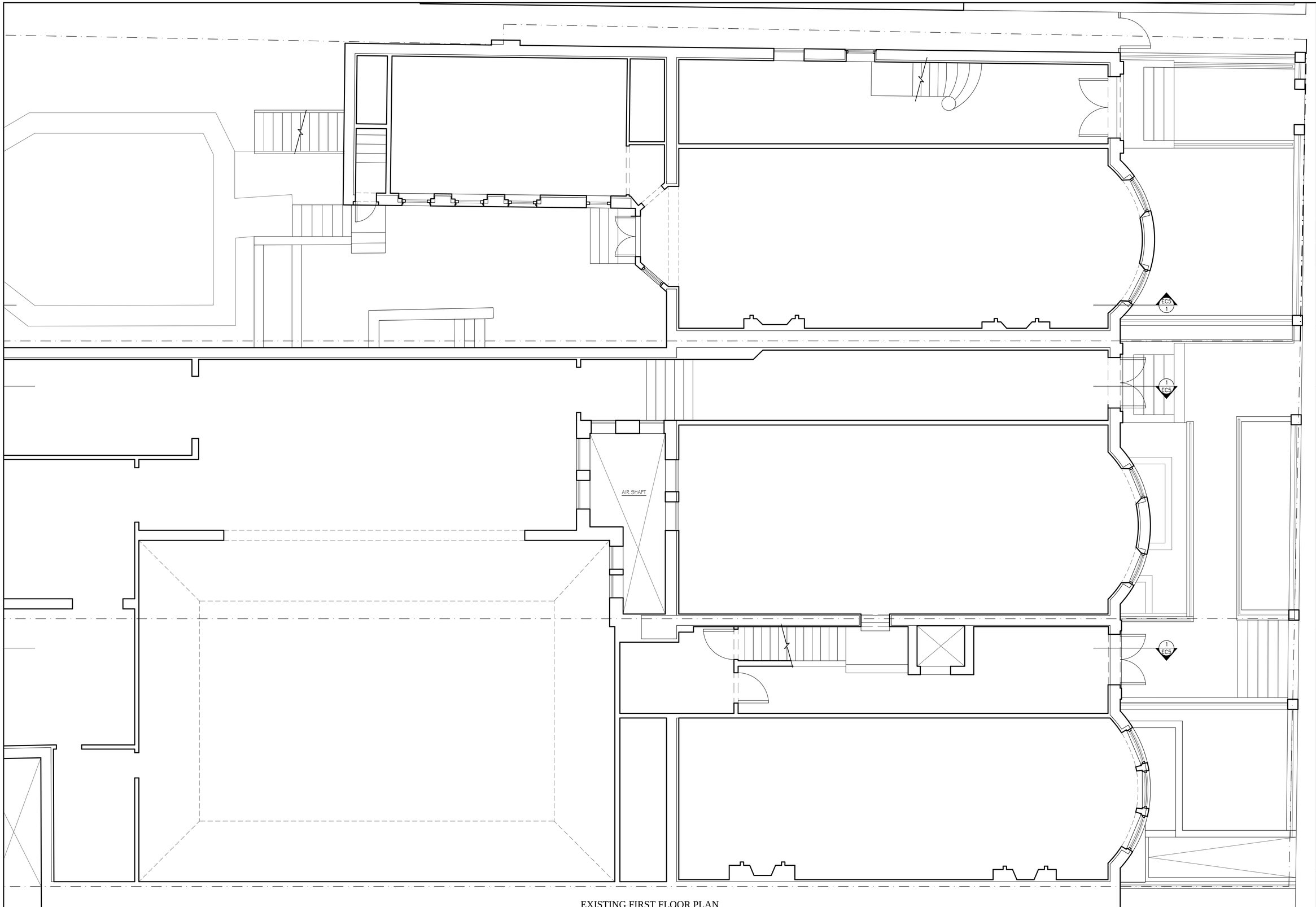

EXISTING FIRST FLOOR PLAN
SCALE: 1/4"=1'-0"

GRASSI DESIGN GROUP
46 Waltham Street, Suite 3A
Boston, MA 02118
Phone 617-956-9992
Fax 917-956-9993
BEAUCHEMIN GRASSI INTERIORS

JOB NO.: 1606
SCALE: 1/4"= 1'-0"
DATE: 01.04.17
REVISED

3-5 JOY STREET
BOSTON, MA

EXISTING FIRST FLOOR PLAN

EC-2

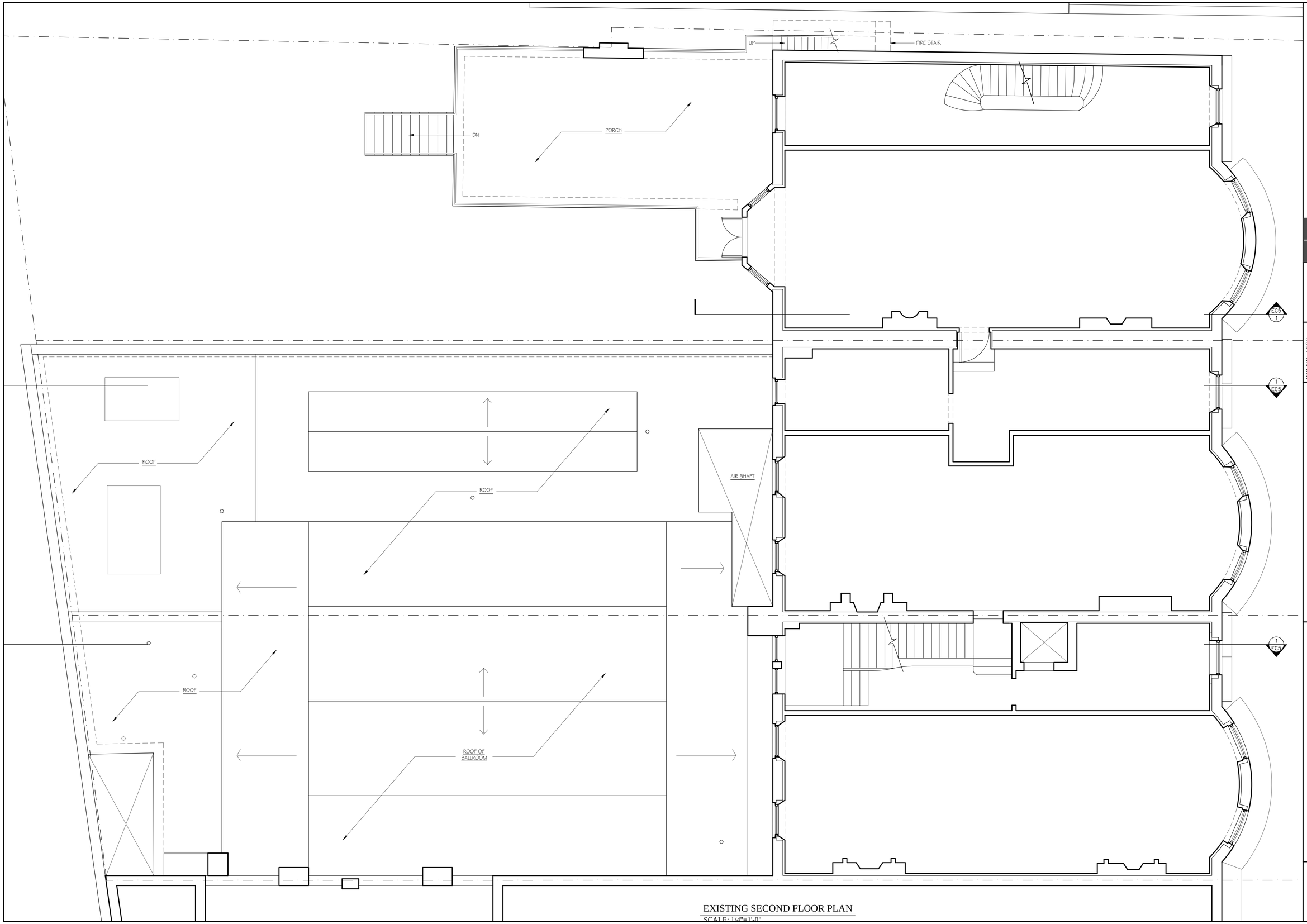

EXISTING SECOND FLOOR PLAN
SCALE: 1/4"=1'-0"

GRASSI DESIGN GROUP
46 Waltham Street, Suite 3A
Boston, MA 02118
Phone 617.956.9992
Fax 917.956.9993
BEAUCHEMIN GRASSI INTERIORS

JOB NO.: 1606
SCALE: 1/4"= 1'-0"
DATE: 01.04.17
REVISED

3-5 JOY STREET
BOSTON, MA

EXISTING SECOND FLOOR PLAN

EC-3

EXISTING THIRD FLOOR PLAN
SCALE: 1/4"=1'-0"

GRASSI DESIGN GROUP
46 Waltham Street, Suite 3A
Boston, MA 02118
Phone 617-956-9992
Fax 917-956-9993
BEAUCHEMIN GRASSI INTERIORS

JOB NO: 1606
SCALE: 1/4"= 1'-0"
DATE: 01.04.17
REVISED

3-5 JOY STREET

BOSTON, MA

EXISTING THIRD FLOOR PLAN

EC-4

EXISTING FOURTH FLOOR PLAN
SCALE: 1/4"=1'-0"

GRASSI DESIGN GROUP
46 Waltham Street, Suite 3A
Boston, MA 02118
Phone 617-956-9992
Fax 917-956-9993
BEAUCHEMIN GRASSI INTERIORS

JOB NO: 1606
SCALE: 1/4"= 1'-0"
DATE: 01.04.17
REVISED

3-5 JOY STREET
BOSTON, MA

EXISTING FOURTH FLOOR PLAN

EC-5

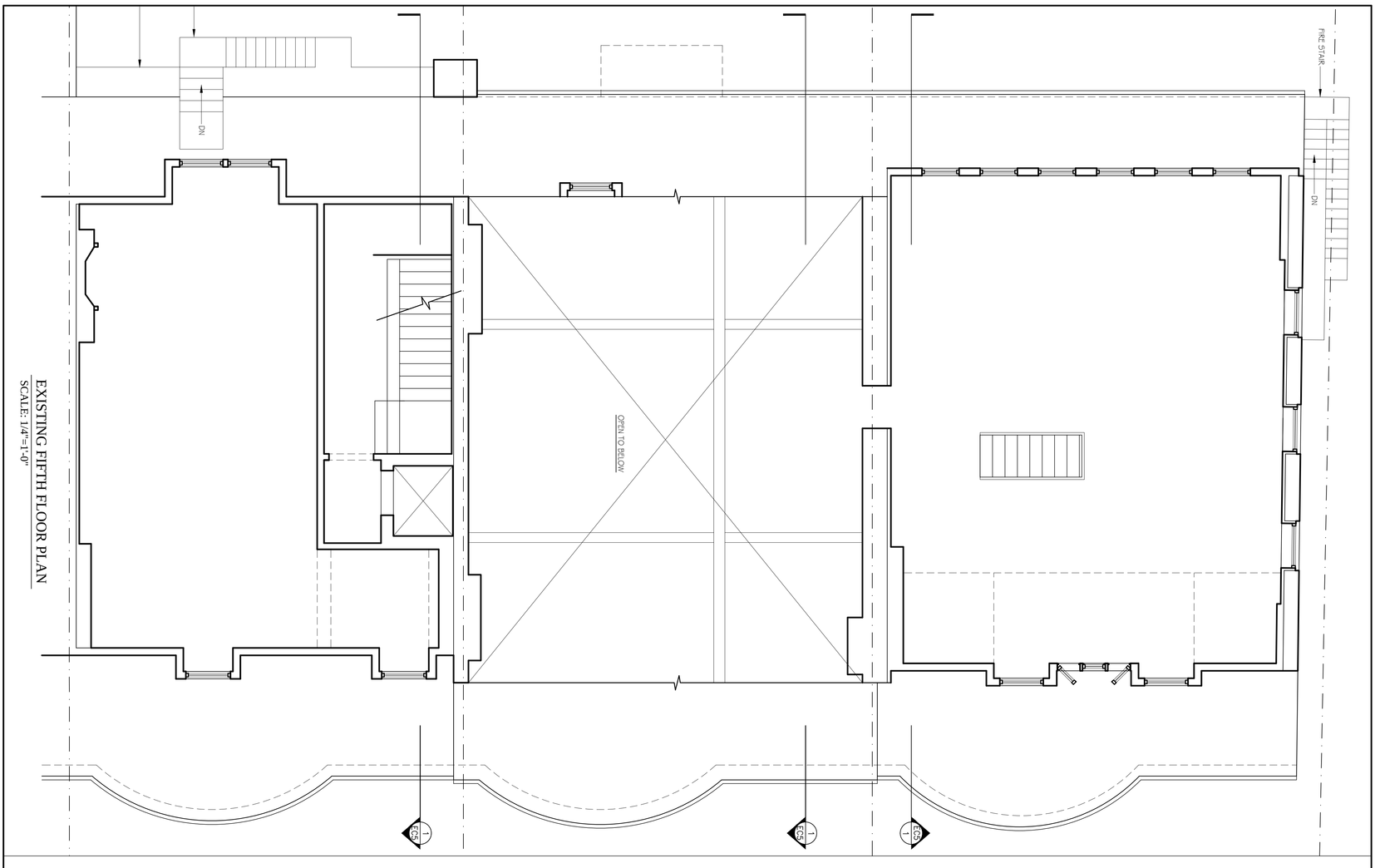

EXISTING FIFTH FLOOR PLAN
SCALE: 1/4"=1'-0"

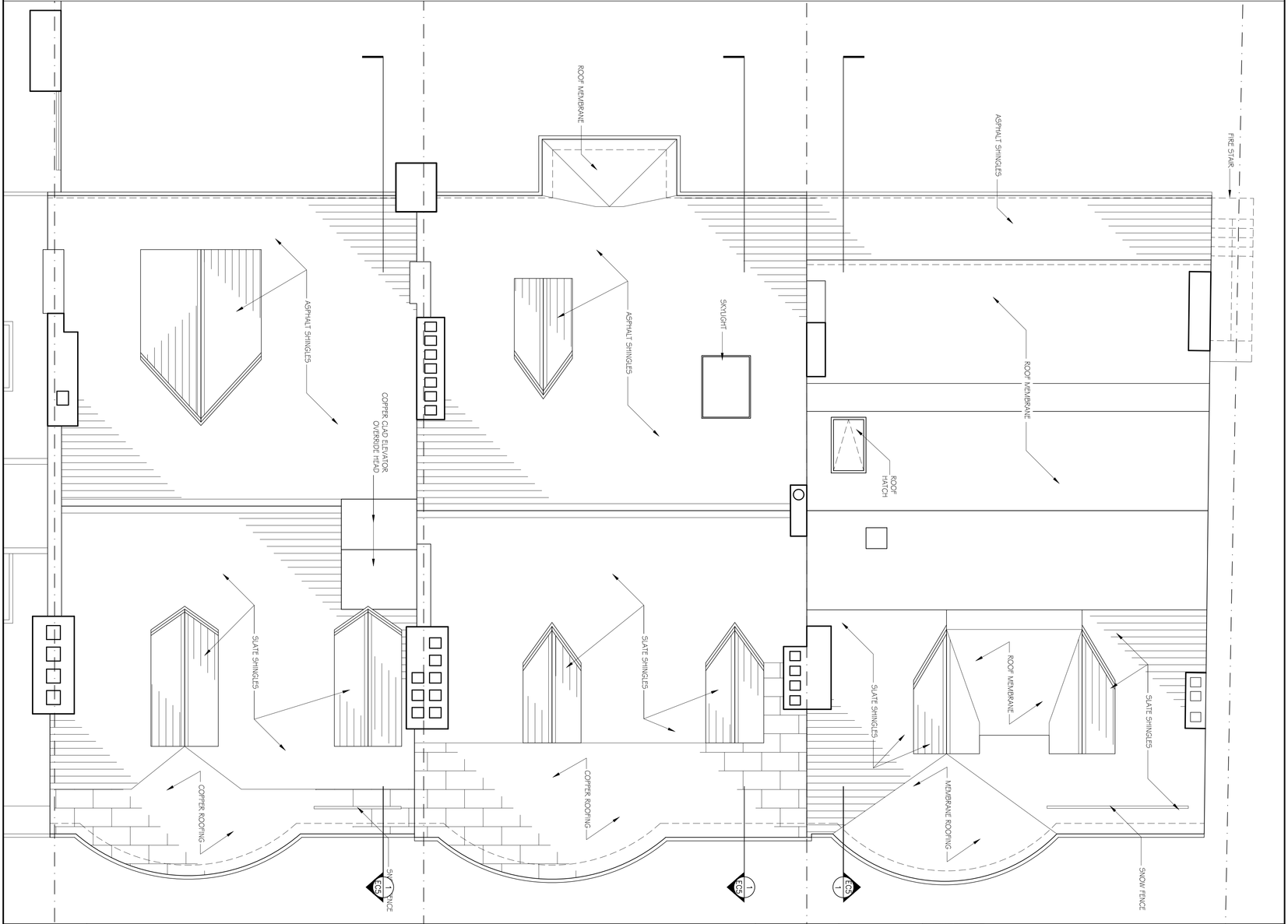

EC6

EXISTING FIFTH FLOOR AND ROOF PLANS

3-5 JOY STREET

BOSTON, MA

JOB NO:	1606
SCALE:	1/4"=1'-0"
DATE:	01.04.17
REVISED	

GRASSI DESIGN GROUP
BEAUCHEMIN GRASSI INTERIORS
46 Waltham Street, Suite 3A
Boston, MA 02118
Phone 617-956-9992
Fax 917-956-9993

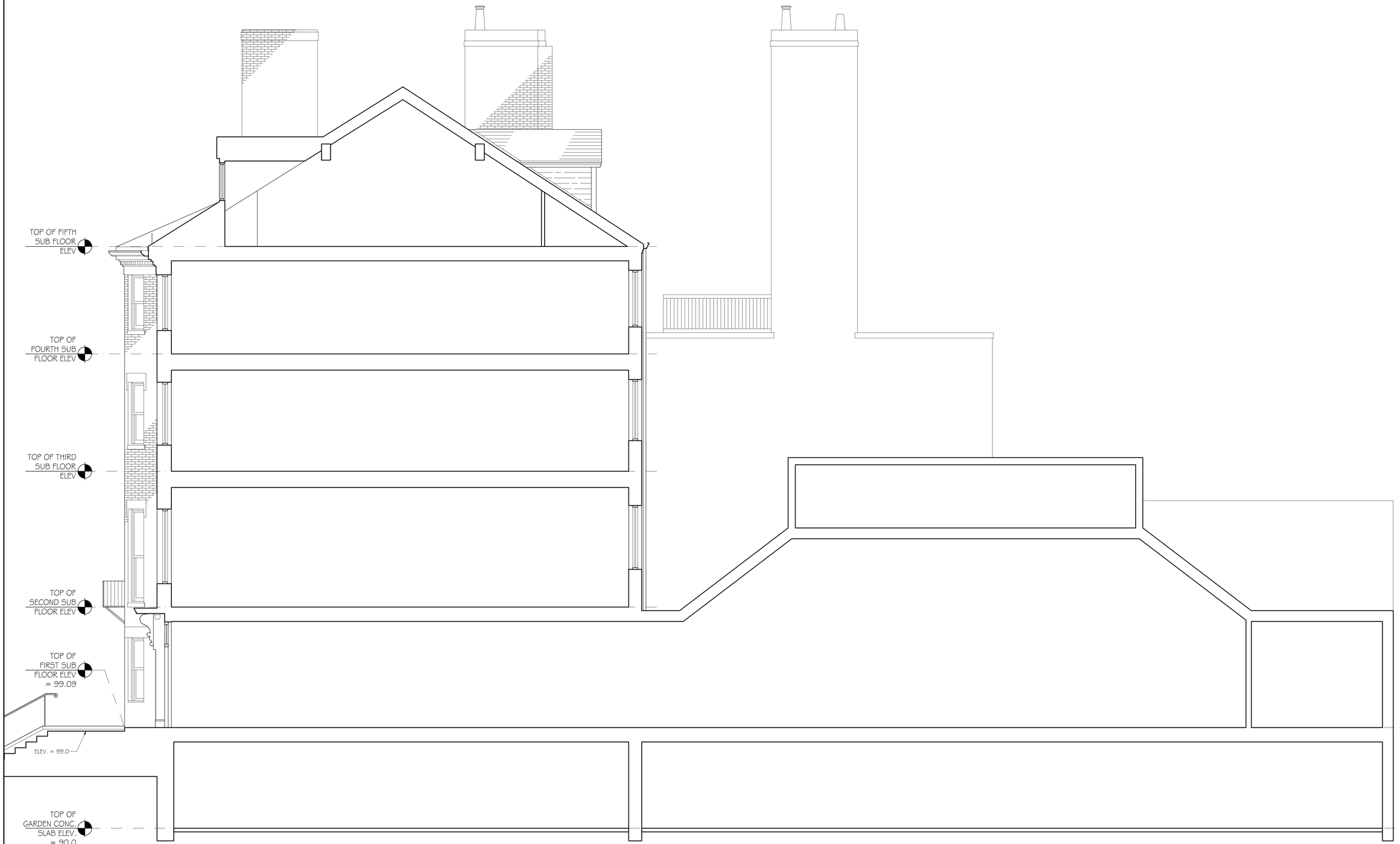

3 JOY STREET - EXISTING BUILDING SECTION

SCALE: ¼" = 1'-0"

GRASSI DESIGN GROUP
46 Waltham Street, Suite 3A
Boston, MA 02118
Phone 617-956-9992
Fax 917-956-9993
BEAUCHEMIN GRASSI INTERIORS

JOB NO.: 1606
SCALE: 1/4" = 1'-0"
DATE: 05.11.16
REVISED

3 JOY STREET
BOSTON, MA

3 JOY STREET EXISTING BUILDING SECTION

EC-5

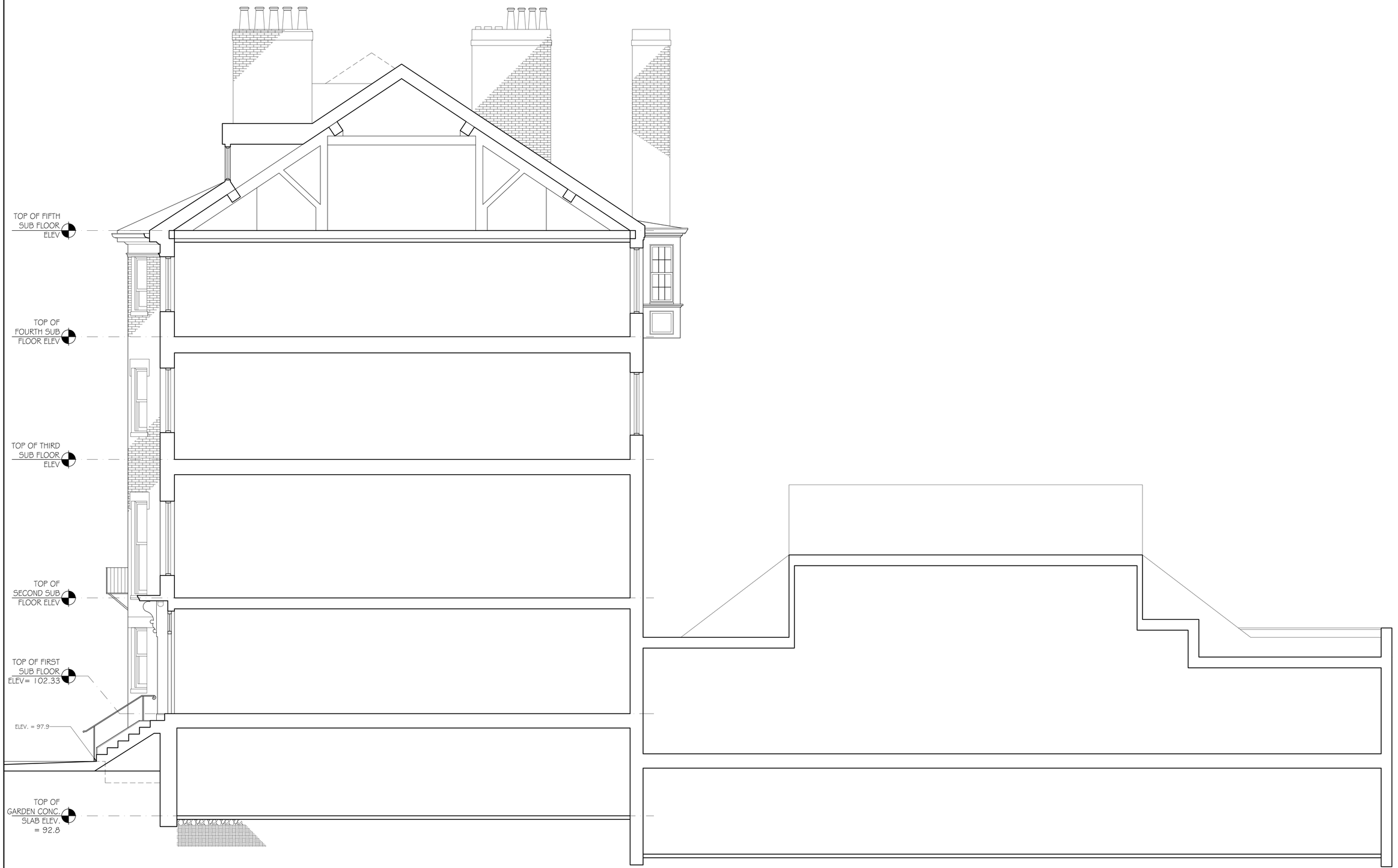

4 JOY STREET - EXISTING BUILDING SECTION

SCALE: 1/4" = 1'-0"

GRASSI DESIGN GROUP
46 Waltham Street, Suite 3A
Boston, MA 02118
Phone 617-956-9992
Fax 917-956-9993
BEAUCHEMIN GRASSI INTERIORS

JOB NO.: 1606
SCALE: 1/4"=1'-0"
DATE: 05.11.16
REVISED

4 JOY STREET
BOSTON, MA

4 JOY STREET EXISTING BUILDING SECTION

EC-5

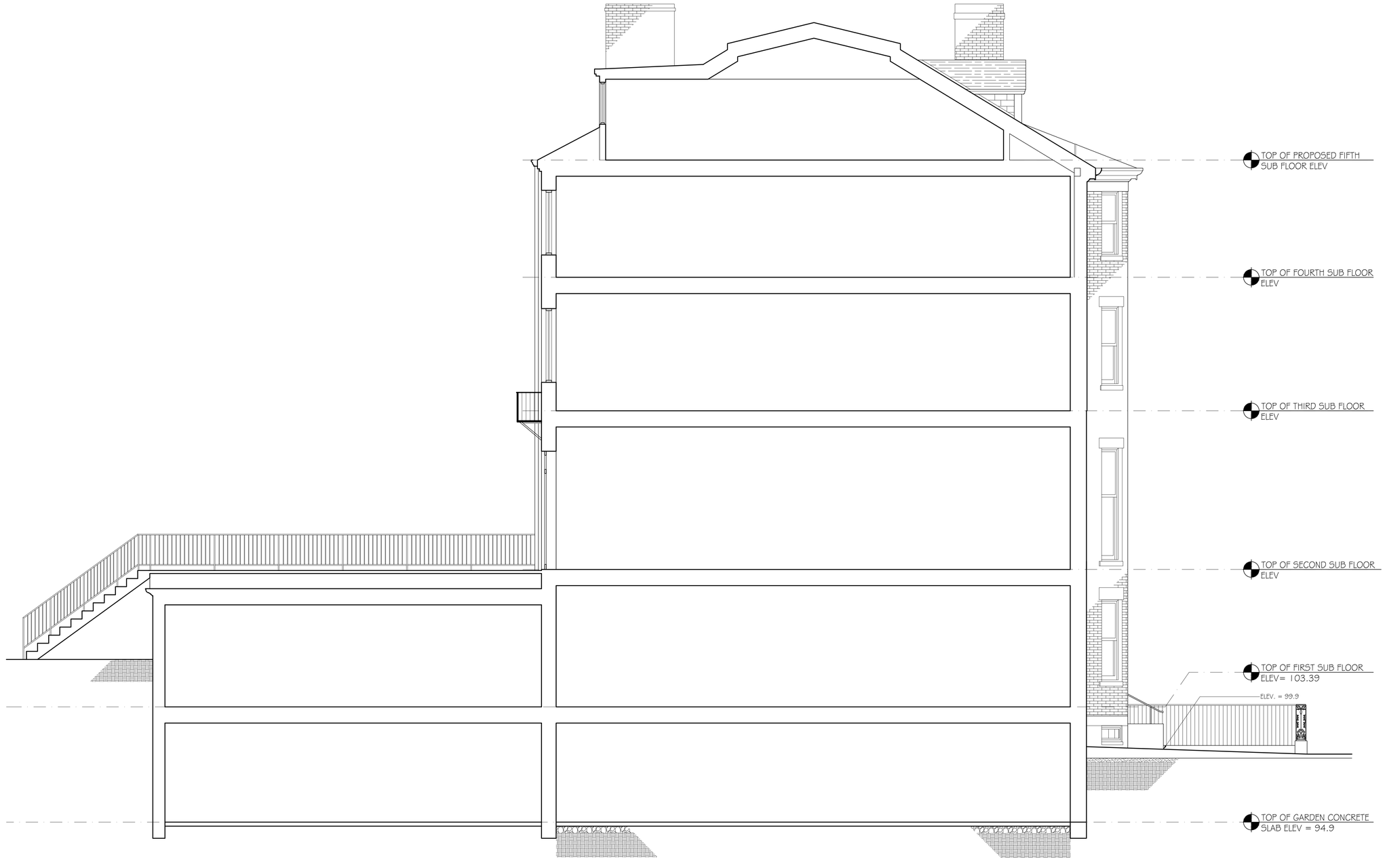

5 JOY STREET - EXISTING BUILDING SECTION

SCALE: 1/4" = 1'-0"

GRASSI DESIGN GROUP
46 Waltham Street, Suite 3A
Boston, MA 02118
Phone 617-956-9992
Fax 917-956-9993
BEAUCHEMIN GRASSI INTERIORS

JOB NO.: 1606
SCALE: 1/4"=1'-0"
DATE: 05.11.16
REVISED

5 JOY STREET
BOSTON, MA

5 JOY STREET EXISTING BUILDING SECTION

EC-5

EXISTING FRONT ELEVATION

SCALE: 1/4"=1'-0"

EC-10

EXISTING FRONT ELEVATION

3-5 JOY STREET

BOSTON, MA

JOB NO:	1606
SCALE:	1/4"= 1'-0"
DATE:	05.11.16
REVISED	

GRASSI DESIGN GROUP
BEAUCHEMIN GRASSI INTERIORS
46 Waltham Street, Suite 3A
Boston, MA 02118
Phone 617-956-9992
Fax 917-956-9993

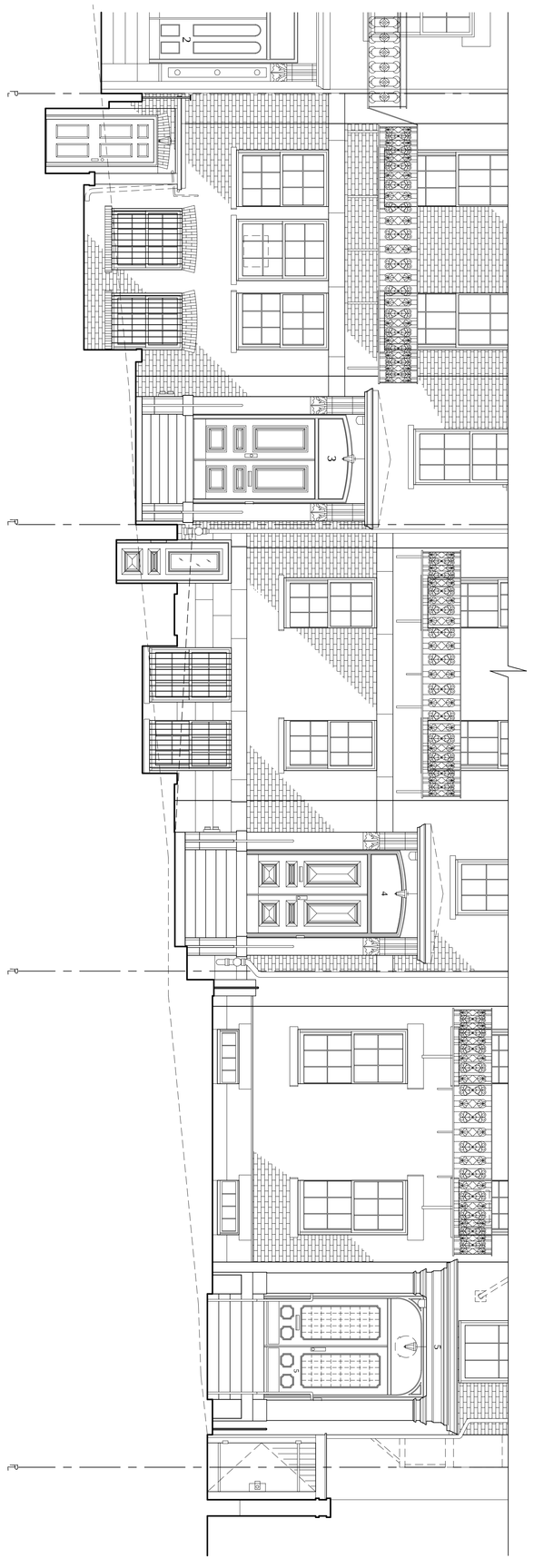

3, 4, 5 JOY STREET PARTIAL FRONT ELEVATION
SCALE: 1/4"=1'-0"

EC-111

EXISTING PARTIAL FRONT ELEVATION

3-5 JOY STREET
BOSTON, MA

JOB NO:	1606
SCALE:	1/4"= 1'-0"
DATE:	05.11.16
REVISED	

GRASSI DESIGN GROUP
BEAUCHEMIN GRASSI INTERIORS
46 Waltham Street, Suite 3A
Boston, MA 02118
Phone 617-956-9992
Fax 917-956-9993

EXISTING REAR ELEVATION

SCALE: 1/4"=1'-0"

GD GRASSI DESIGN GROUP
BG BEAUCHEMIN GRASSI INTERIORS
46 Waltham Street, Suite 3A
Boston, MA 02118
Phone 617-956-9992
Fax 917-956-9993

JOB NO: 1606
SCALE: 1/4"= 1'-0"
DATE: 12.15.16
REVISED

3-5 JOY STREET
BOSTON, MA

EXISTING REAR ELEVATION

EC-12

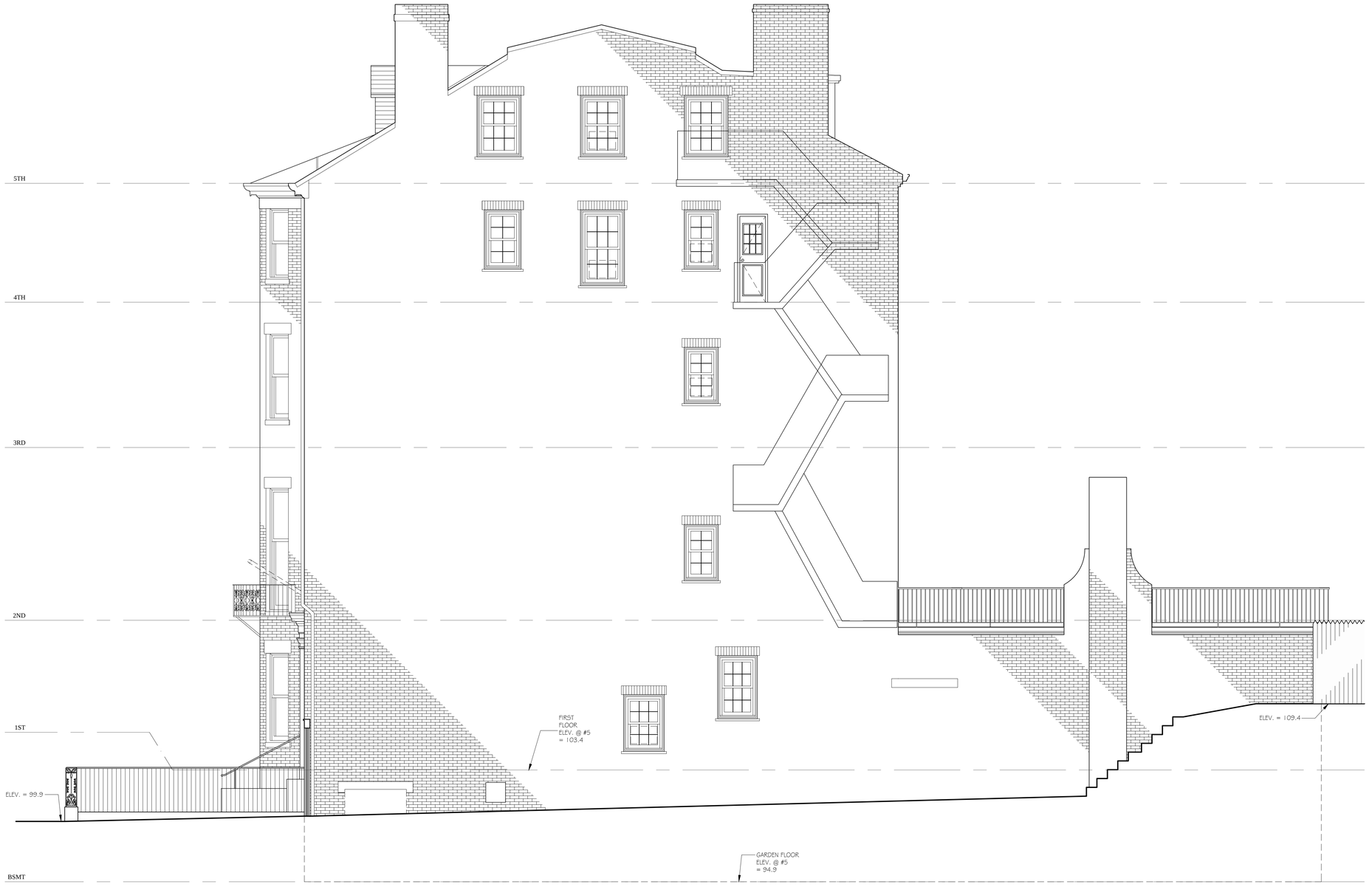

5 JOY STREET - EXISTING NORTH BUILDING ELEVATION

SCALE: 1/4" = 1'-0"

GD GRASSI DESIGN GROUP
BG BEAUCHEMIN GRASSI INTERIORS
46 Waltham Street, Suite 3A
Boston, MA 02118
Phone 617.956.9992
Fax 917.956.9993

JOB NO: 1606
SCALE: 1/4" = 1'-0"
DATE: 12.15.16
REVISED

3-5 JOY STREET
BOSTON, MA

EXISTING NORTH ELEVATION

EC-13

3

2
3
2 JOY

3

4
4

4
4
VISITORS WELCOME

4

Please do not open the window.

The Air Conditioner is set to turn on and off automatically.

5

APPALACHIAN MOUNTAIN CLUB
1876

4
5
TOW ZONE
NO
STOPPING
ANY
TIME

DRIVE
SLOW

5
AMC
5

APPALACHIAN

JOIN THE APPALACHIAN MOUNTAIN
TAKE A HIKE ON THE BAY CIRCUIT TRAIL

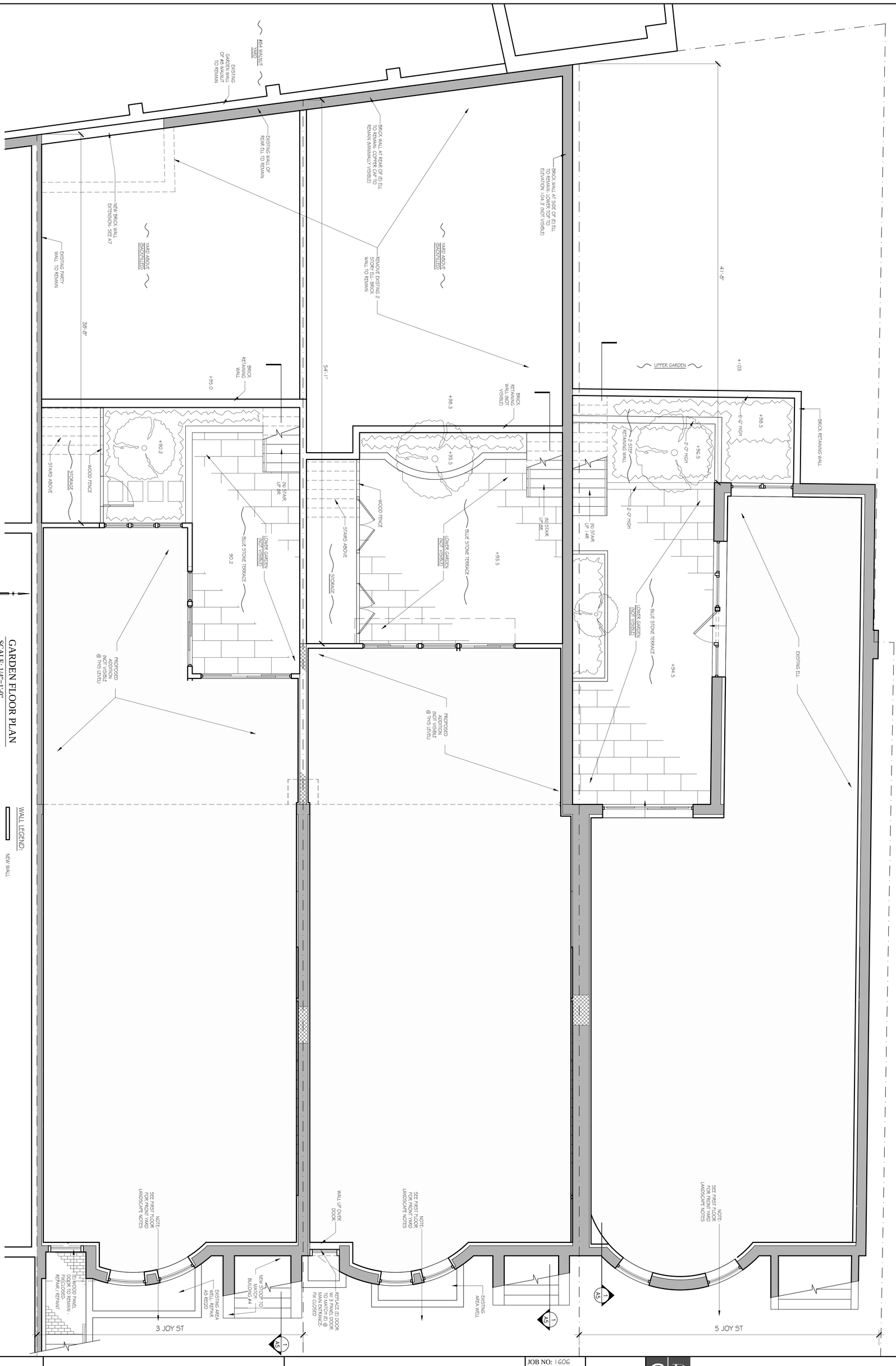

A1

GARDEN FLOOR PLAN

3, 4, 5 JOY STREET

BOSTON, MA

JOB NO:	1606
SCALE:	1/4"= 1'-0"
DATE:	02.10.17
REVISED	

GRASSI DESIGN GROUP
BEAUCHEMIN GRASSI INTERIORS
46 Waltham Street, Suite 3A
Boston, MA 02118
Phone 617-956-9992
Fax 917-956-9993

+106.4 = (EXISTING GRADE)

NEW RETAINING WALL (NOT VISIBLE)

BRICK RETAINING WALL

+103

+103

+96.5

LOWER EXISTING LANDSCAPED REAR YARD (NOT VISIBLE)

EXISTING ELL

+96.5

UPPER GARDEN

2 STEP RETAINING WALL

SUNKEN GARDEN

+94.5

NEW PTD WOOD STAIR W/ PTD MTL HANDRAIL SYSTEM, TYP.

(N) STAIR DN 14R

REMOVE EXISTING 2 STORY ELL

(N) STAIR DN 8R

(E) BRICK WALL OF REAR ELL TO REMAIN- TOP OF WALL @ 6'-0" ABOVE GRADE OF YARDS & GARDENS- (NOT VISIBLE)

BRICK RETAINING WALL

LANDSCAPED REAR YARD (NOT VISIBLE)

SUNKEN GARDEN

+93.5

+98.3

UPPER GARDEN

+95.5

PROPOSED ADDITION

NEW PTD WOOD STAIR W/ PTD MTL HANDRAIL SYSTEM, TYP.

(N) STAIR UP 8R

IPE WOOD DECK

(N) STAIR DN 7R

(N) GARDEN WALL- (NOT VISIBLE)

NEW TERRACE

BRICK RETAINING WALL

SUNKEN GARDEN

90.2

+95.0

LANDSCAPED REAR YARD (NOT VISIBLE)

UPPER GARDEN

+90.2

NEW PTD WOOD STAIR W/ PTD MTL HANDRAIL SYSTEM, TYP.

REMOVE EXISTING 2 STORY ELL- BRICK WALL TO REMAIN

PROPOSED ADDITION

(N) STAIR UP 7R

IPE WOOD DECK

EXISTING DOOR TO PASSAGEWAY TO REMAIN

EXISTING GARDEN WALL @ #6

EXISTING BRICK PAVERS @ PASSAGEWAY TO REMAIN

(E) CURB TO REMAIN

(E) STEEL FENCE- REPAIR & PAINT

INTERCOM

REPLACE EXISTING MTL HANDRAIL- NEW LAWLER MCR WITH CAST VOLUTES- SEE 2/A5 (5IM)

(N) BRICK PAVERS IN STONE DUST

BOSTON CITY HALL PAVERS (W/O BLACKS)

REPAIR, CLEAN, AND RE-POINT EXISTING GRANITE STAIRS

(E) CURB TO REMAIN

SIDEWALK

5 JOY ST

NEW PLANTINGS- PERIMETER BOXWOOD HEDGE WITH ORNAMENTAL TREE- GROUND COVER & BULBS

CLEAN EXISTING GRANITE CURB - RESET CORNER & REPAIR FENCE AS REQ'D - RE POINT ALL JOINTS

(E) PAINTED STEEL / CAST IRON FENCE

(E) GRANITE CURB

1 A5

LANDSCAPE

EXISTING BROWNSTONE CURB- RESTORE

INTERCOM

REPAIR, CLEAN, AND RESTORE EXISTING BROWNSTONE STAIRS

BOSTON CITY HALL PAVERS (W/O BLACKS)

1 A5

(N) BRICK PAVERS IN STONE DUST

REPLACE (E) 1 ST TREAD W/ NEW TO MATCH EXISTING

NEW PRECAST CONC. CURB TO MATCH EXIST. CURB COLOR, SHAPE & FINISH

EXISTING AREA WELLS TO REMAIN- REPAIR AS REQ'D

4 JOY ST

REMOVE EXISTING RAMP / CURB AND RAILING SYSTEM

CLEAN AND REPAIR EXISTING GRANITE CURB

NEW PLANTINGS- PERIMETER BOXWOOD HEDGE WITH ORNAMENTAL TREE- GROUND COVER & BULBS

(N) STEEL HANDRAIL SYSTEM- PTD, SEE 1/A8

EXISTING RETAINING WALL- EXTEND SIDE OF STOOP / BUILDING FRONT TO MATCH

EXISTING STONE AND METAL CORNER POST- RESTORE

INTERCOM

(N) STOOP WITH PRE CAST CONC. CURBS AND TREADS TO MATCH #4 JOY

BOSTON CITY HALL PAVERS (W/O BLACKS)

1 A5

(N) BRICK PAVERS IN STONE DUST

REMOVE EXISTING STAIR / LANDING & RAILING SYSTEM

SIDEWALK

NEW PLANTINGS- PERIMETER BOXWOOD HEDGE WITH ORNAMENTAL TREE- GROUND COVER & BULBS

EXISTING AREA WELL- REPAIR RETAINING WALL AS REQ'D

CLEAN EXISTING GRANITE CURB - RESET CORNER & REPAIR FENCE AS REQ'D - RE POINT ALL JOINTS

(E) HAND RAIL TO REMAIN

3 JOY ST

NEW BRICK PAVERS WITH BRONZE AREA DRAIN

REMOVE EXISTING WOOD RAMP AND RESTORE EXISTING STONE STAIRS BELOW

NORTH

FIRST FLOOR PLAN

SCALE: 1/4"=1'-0"

WALL LEGEND:

NEW WALL

EXISTING WALL TO REMAIN

GRASSI DESIGN GROUP
46 Waltham Street, Suite 3A
Boston, MA 02118
Phone 617-956-9992
Fax 917-956-9993

BEAUCHEMIN GRASSI INTERIORS

JOB NO: 1606
SCALE: 1/4" = 1'-0"
DATE: 02.10.17
REVISED

3, 4, 5 JOY STREET

BOSTON, MA

FIRST FLOOR PLAN

A2

REMOVE (E) CHIMNEY ABOVE

NEW COPPER SIDING @ EXTENSION

REMOVE EXISTING FIRE ESCAPE

NEW TERRACE W/ 1x4 IPE DECKING

PROPOSED ADDITION

(E) ENTRY HOOD- PATCH / REPAIR AS REQ'D

(E) BALCONY - REPAIR / REPAINT AS REQUIRED

NEW PTD STEEL HAND RAIL SYSTEM, TYP.

NEW BALCONY W/ 1x4 IPE DECKING

5 JOY ST

1 A5

(E) GARDEN WALL BELOW

REMOVE (E) ENTRY HOOD / STEP FLASHING & RESTORE / REPLACE (E) COPPER DRIP EDGE . FLASHING

1 A5

(E) BALCONY - REPAIR / REPAINT AS REQUIRED

NEW BALCONY W/ 1x4 IPE DECKING

PROPOSED ADDITION

NEW PTD STEEL HAND RAIL SYSTEM, TYP.

LINE OF (E) REAR WALL

EXISTING COPPER CAP @ (E) REAR ELL WALL TO REMAIN

REAR YARDS / GARDENS BELOW (NOT VISIBLE)

REMOVE (E) CHIMNEY

NEW PTD STEEL HAND RAIL SYSTEM

NEW TERRACE W/ 1x4 IPE DECKING

1 A5

REMOVE (E) ENTRY HOOD / STEP FLASHING & RESTORE / REPLACE (E) COPPER DRIP EDGE . FLASHING

(E) BALCONY - REPAIR / REPAINT AS REQUIRED

EXISTING WALL @ #5 WALNUT BELOW

EXTEND (E) BRICK WALL & ADD MATCHING COPPER CAP

3 JOY ST

PROPOSED ADDITION

LINE OF (E) REAR WALL

REMOVE EXISTING 2 STORY ELL BELOW- BRICK WALL TO REMAIN

NORTH

SECOND FLOOR PLAN

SCALE: 1/4"=1'-0"

WALL LEGEND:

NEW WALL

EXISTING WALL TO REMAIN

GRASSI DESIGN GROUP
46 Waltham Street, Suite 3A
Boston, MA 02118
Phone 617-956-9992
Fax 917-956-9993

BEAUCHEMIN GRASSI INTERIORS

JOB NO: 1606
SCALE: 1/4"=1'-0"
DATE: 02.10.17
REVISED

3, 4, 5 JOY STREET

BOSTON, MA

SECOND FLOOR PLAN

A3

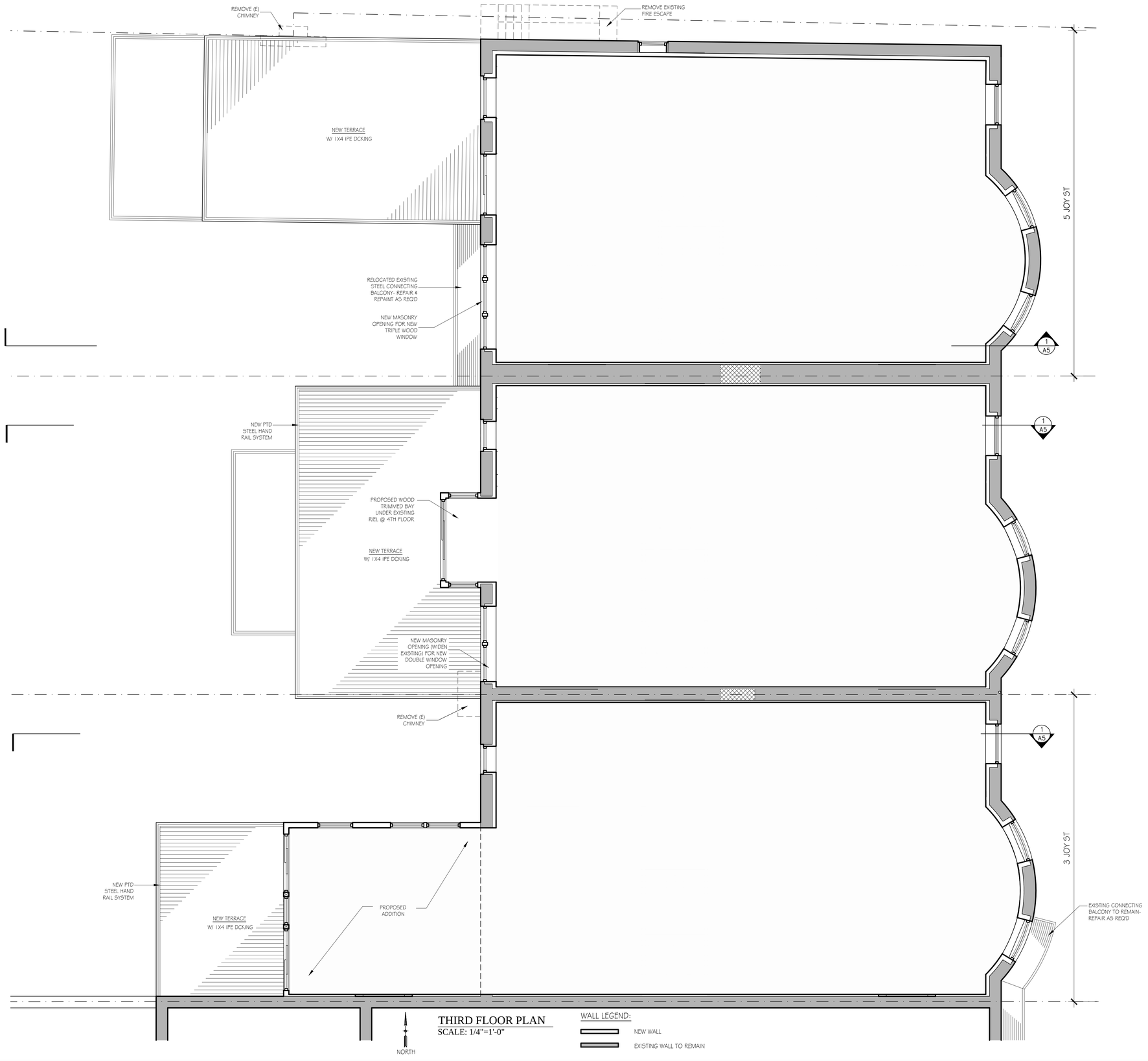

THIRD FLOOR PLAN
SCALE: 1/4"=1'-0"

WALL LEGEND:
NEW WALL
EXISTING WALL TO REMAIN

GRASSI DESIGN GROUP
46 Waltham Street, Suite 3A
Boston, MA 02118
Phone 617.956.9992
Fax 917.956.9993
BEAUCHEMIN GRASSI INTERIORS

JOB NO.: 1606
SCALE: 1/4"=1'-0"
DATE: 02.10.17
REVISED

3, 4, 5 JOY STREET
BOSTON, MA

THIRD FLOOR PLAN

A4

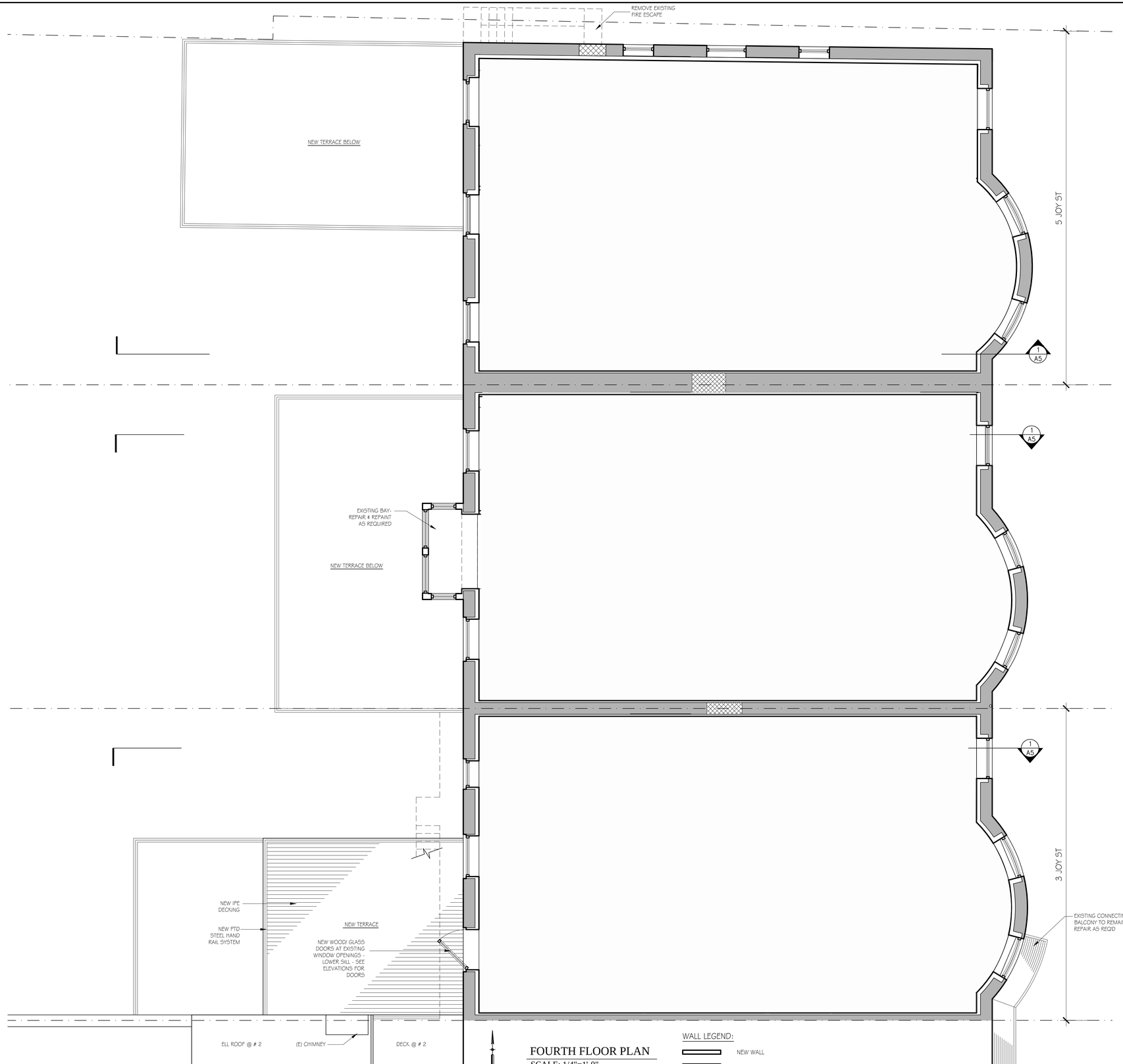

FOURTH FLOOR PLAN

SCALE: 1/4"=1'-0"

WALL LEGEND:

NEW WALL

EXISTING WALL TO REMAIN

GRASSI DESIGN GROUP
46 Waltham Street, Suite 3A
Boston, MA 02118
Phone 617-956-9992
Fax 917-956-9993

BEAUCHEMIN GRASSI INTERIORS

JOB NO: 1606
SCALE: 1/4" = 1'-0"
DATE: 02.10.17
REVISED

3, 4, 5 JOY STREET
BOSTON, MA

FOURTH FLOOR PLAN

A5

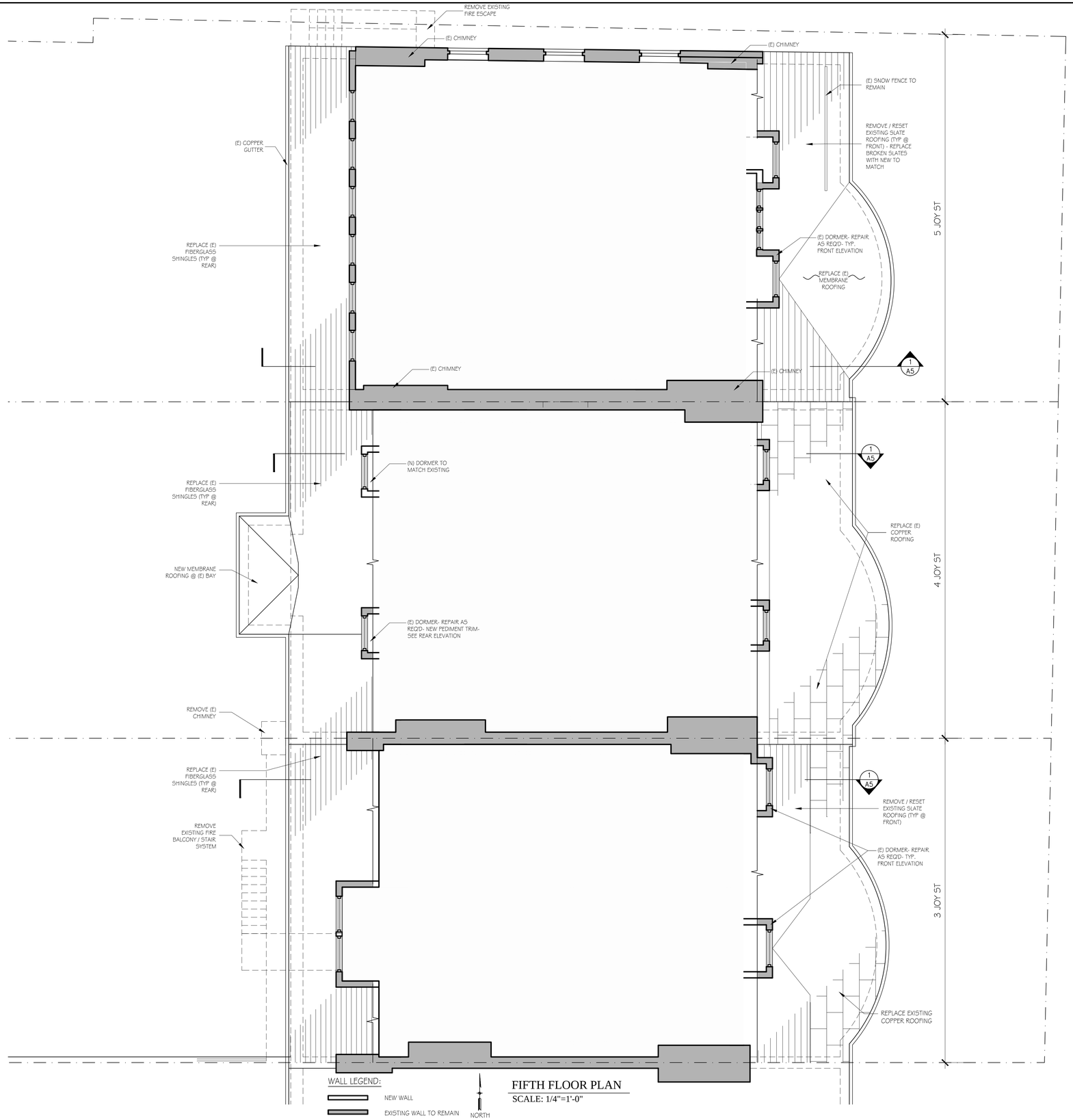

FIFTH FLOOR PLAN
SCALE: 1/4"=1'-0"

GRASSI DESIGN GROUP
46 Waltham Street, Suite 3A
Boston, MA 02118
Phone 617-956-9992
Fax 917-956-9993
BEAUCHEMIN GRASSI INTERIORS

JOB NO: 1606
SCALE: 1/4"=1'-0"
DATE: 02.10.17
REVISED

3, 4, 5 JOY STREET
BOSTON, MA

FIFTH FLOOR PLAN

A6

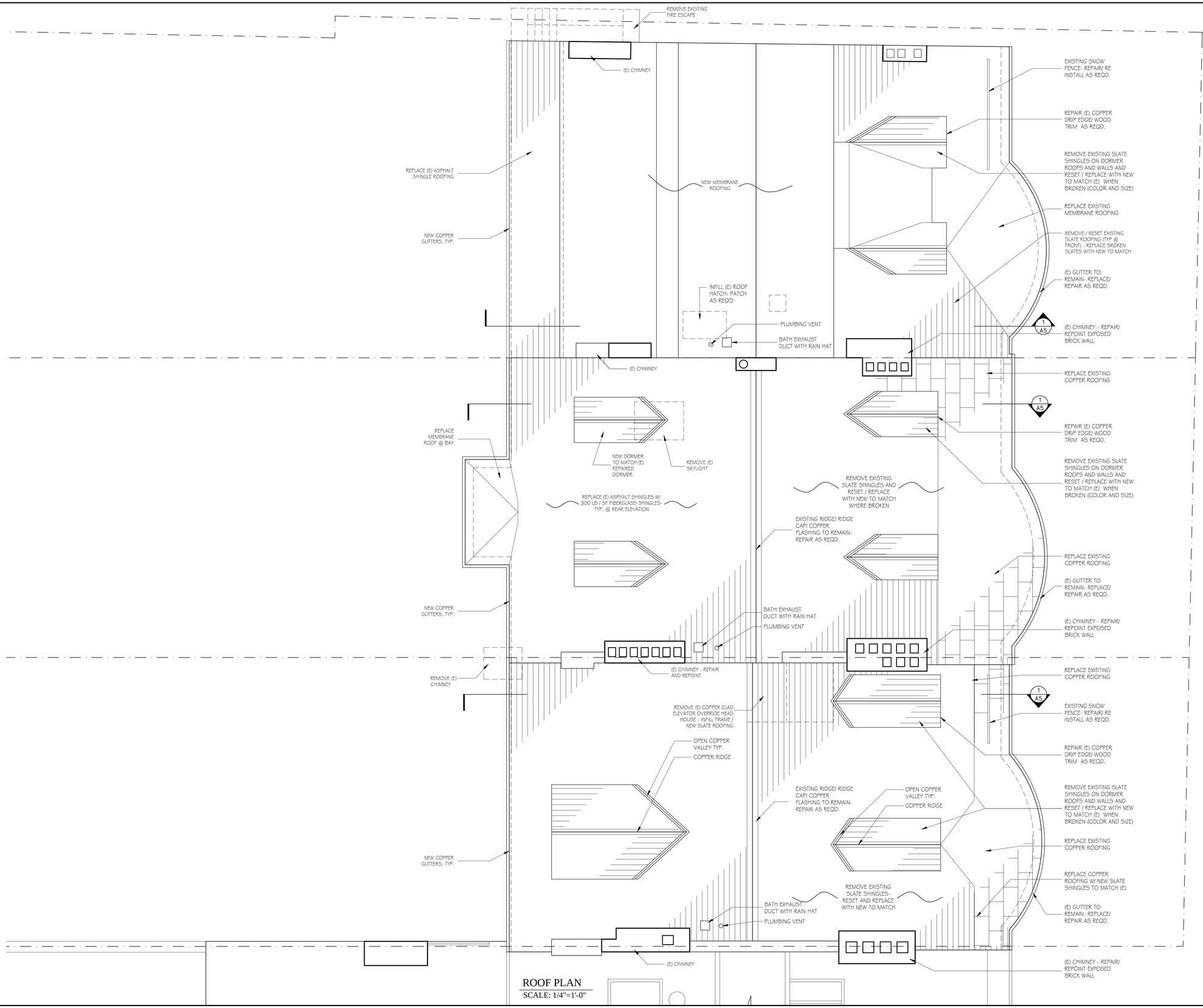

ROOF PLAN
SCALE: 1/4"=1'-0"

GRASSI DESIGN GROUP
46 Waltham Street, Suite 3A
Boston, MA 02118
Phone 617-956-9992
Fax 917-956-9993
BEAUCHEMIN GRASSI INTERIORS

JOB NO: 1606
SCALE: 1/4"= 1'-0"
DATE: 02.10.17
REVISED

3, 4, 5 JOY STREET
BOSTON, MA

ROOF PLAN

A7

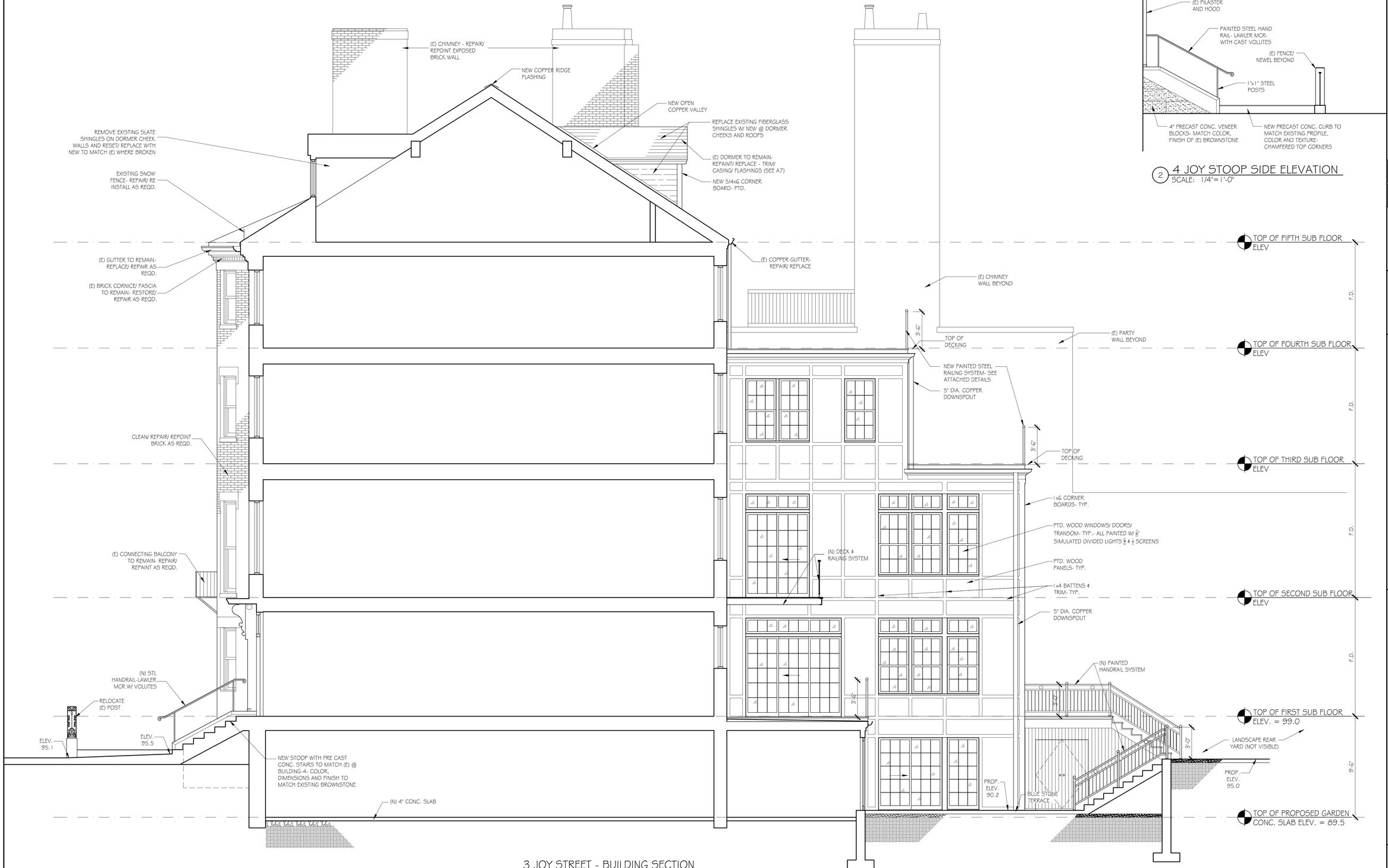

3 JOY STREET - BUILDING SECTION
SCALE: ¼" = 1'-0"

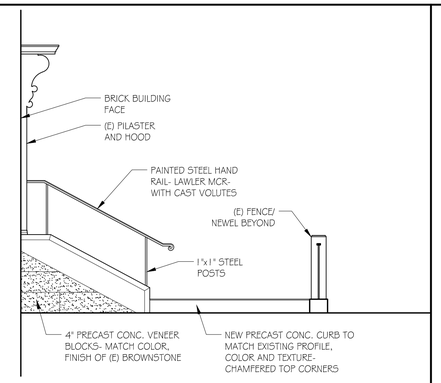

2 4 JOY STOOP SIDE ELEVATION
SCALE: 1/4"= 1'-0"

GRASSI DESIGN GROUP
46 Waltham Street, Suite 3A
Boston, MA 02118
Phone 617-956-9992
Fax 917-956-9993
GD BG BEAUCHEMIN GRASSI INTERIORS

JOB NO.: 1606
SCALE: 1/4"= 1'-0"
DATE: 02.10.17
REVISED

3 JOY STREET
BOSTON, MA

#3 - BUILDING SECTION

A5

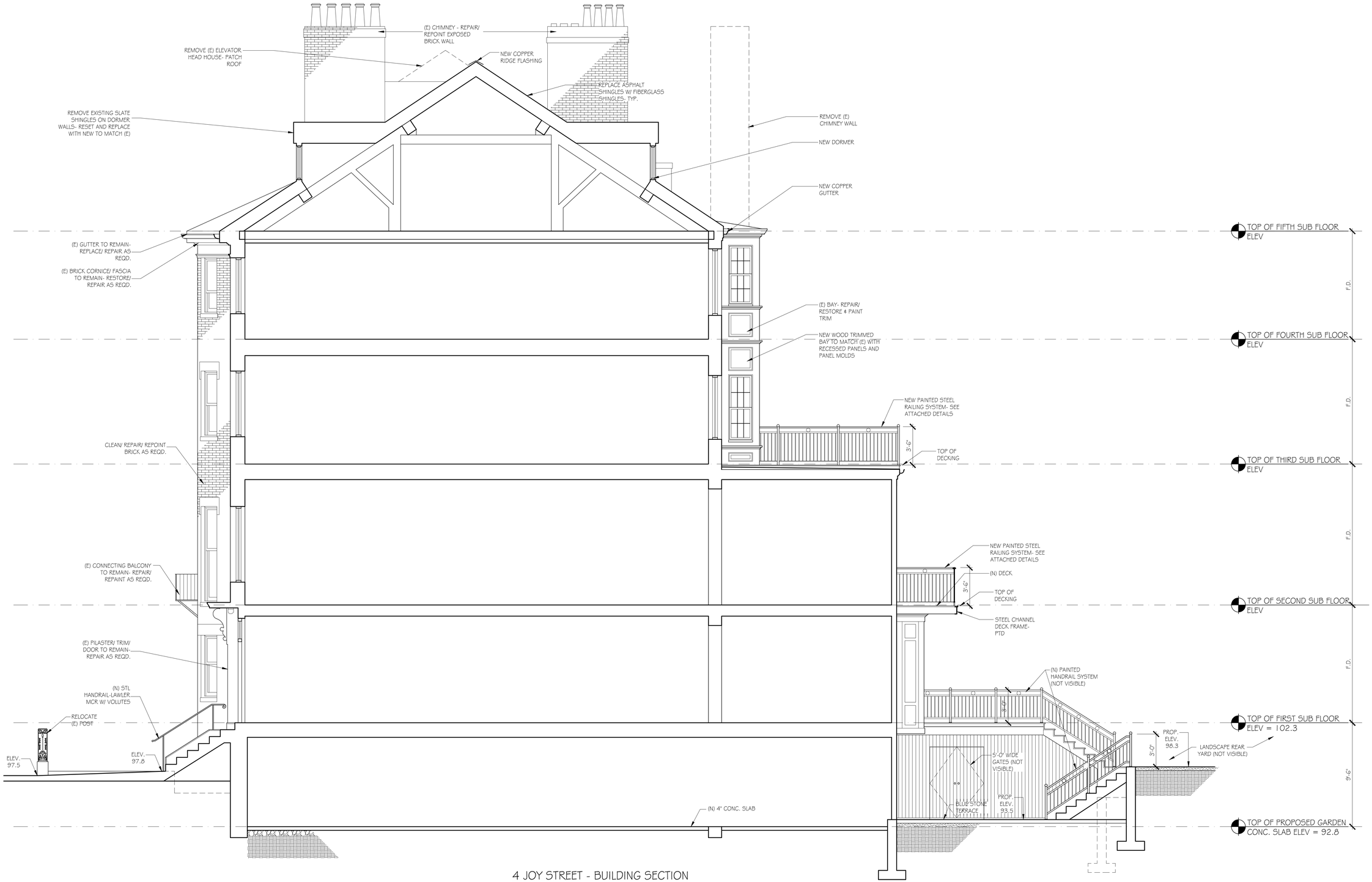

4 JOY STREET - BUILDING SECTION
SCALE: ¼" = 1'-0"

GRASSI DESIGN GROUP
46 Waltham Street, Suite 3A
Boston, MA 02118
Phone 617-956-9992
Fax 917-956-9993
BEAUCHEMIN GRASSI INTERIORS

JOB NO.: 1606
SCALE: 1/4" = 1'-0"
DATE: 02.10.17
REVISED

4 JOY STREET
BOSTON, MA

#4 - BUILDING SECTION

A5

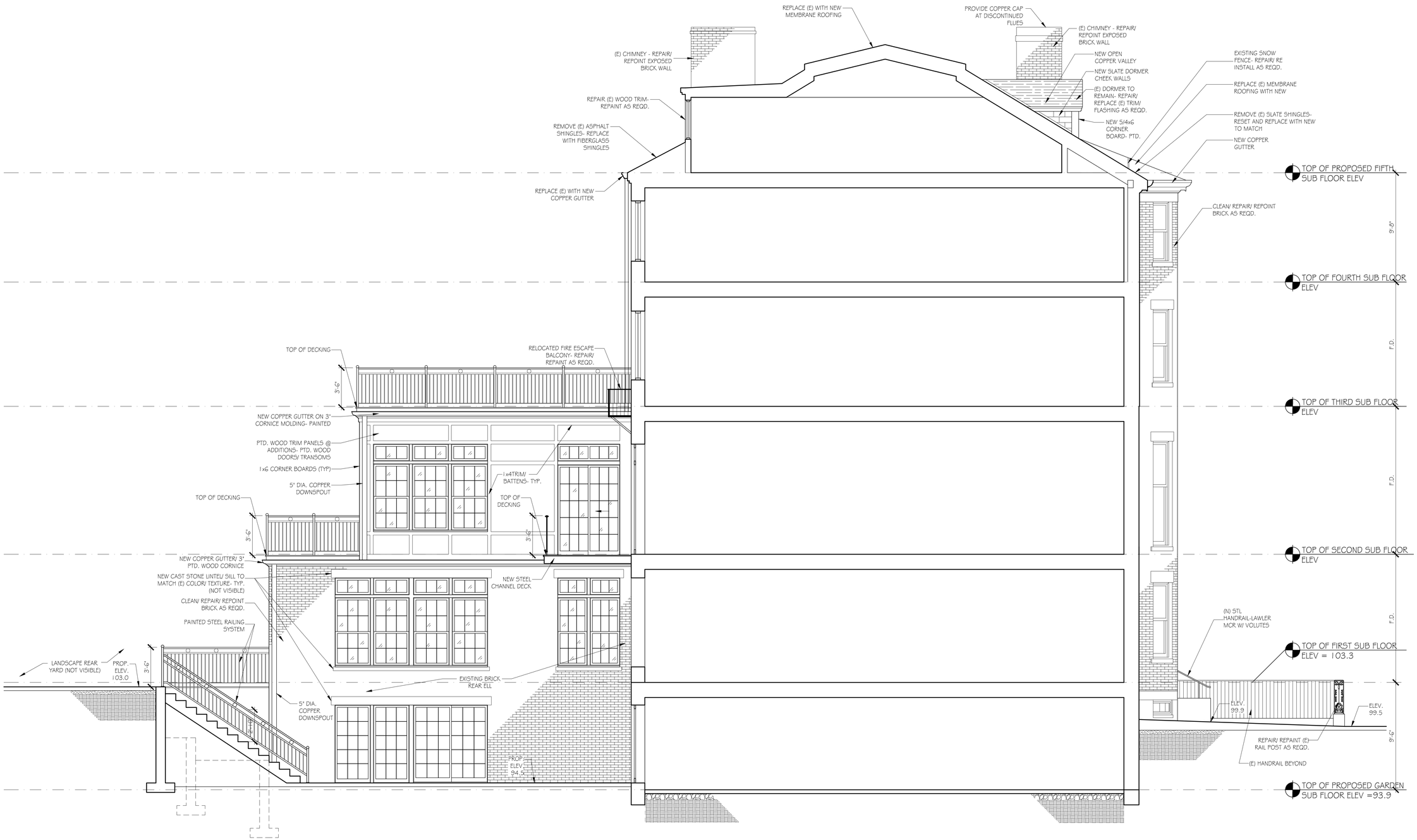

5 JOY STREET - BUILDING SECTION

SCALE: 1/4" = 1'-0"

GRASSI DESIGN GROUP
46 Waltham Street, Suite 3A
Boston, MA 02118
Phone 617-956-9992
Fax 917-956-9993
BEAUCHEMIN GRASSI INTERIORS

JOB NO.: 1606
SCALE: 1/4" = 1'-0"
DATE: 02.10.17
REVISED

5 JOY STREET
BOSTON, MA

#5 - BUILDING SECTION

A5

#3 JOY STREET

#4 JOY STREET

#5 JOY STREET

REMOVE HEAD HOUSE/ SKYLIGHT- PATCH/ REPAIR ROOF RAFTERS- NEW SHINGLES TO MATCH EXISTING

EXISTING RIDGE/ RIDGE CAP/ COPPER FLASHING TO REMAIN- REPAIR AS REQD.

(E) CHIMNEY - REPAIR/ REPOINT EXPOSED BRICK WALL

EXISTING RIDGE/ RIDGE CAP/ COPPER FLASHING TO REMAIN- REPAIR AS REQD.

REMOVE EXISTING SLATE SHINGLES- RESET AND REPLACE WITH NEW TO MATCH

(E) CHIMNEY - REPAIR/ REPOINT EXPOSED BRICK WALL

REMOVE (E) VENT AND PATCH MEMBRANE ROOFING AS REQD.

REPLACE (E) SASH / FRAME AT DORMER WITH NEW TRUE DIVIDED LIGHT- WOOD WINDOWS - SASH TO MATCH (E) - PROVIDE ½ SCREENS

(E) CHIMNEY - REPAIR/ REPOINT EXPOSED BRICK WALL

EXISTING MEMBRANE ROOFING TO REMAIN- REPAIR/ REPLACE AS REQD.

EXISTING COPPER SIDING/ TRIM - REPAIR/ REPLACE AS REQD. - NEW COPPER DRIP EDGE (TYP.)

REMOVE EXISTING SLATE SHINGLES- RESET AND REPLACE WITH NEW TO MATCH

REPLACE (E) SASH / FRAME AT DORMER WITH NEW TRUE DIVIDED LIGHT- WOOD WINDOWS - SASH TO MATCH (E) - PROVIDE ½ SCREENS

REMOVE EXISTING SLATE SHINGLES ON DORMER WALLS- RESET AND REPLACE WITH NEW TO MATCH (E)

REPAIR (E) COPPER DRIP EDGE/ WOOD TRIM AS REQD.

REPAIR (E) COPPER SIDING / WOOD TRIM AS REQD. - REPLACE COPPER DRIP EDGE

REPLACE (E) SASH / FRAME AT DORMER WITH NEW TRUE DIVIDED LIGHT- WOOD WINDOWS - SASH TO MATCH (E) - PROVIDE ½ SCREENS

EXISTING SNOW FENCE- REPAIR/ RE-INSTALL AS REQD.

(E) GUTTER TO REMAIN- REPLACE/ REPAIR AS REQD.

REPLACE EXISTING MEMBRANE ROOFING

EXISTING SNOW FENCE- REPAIR/ RE INSTALL AS REQD.

REPLACE (E) W/ NEW COPPER GUTTER

REPLACE COPPER ROOFING

RESTORE STONE BAND TO MATCH (E)- REPAIR AS REQD.

(E) FASCIA/ CORNICE TO REMAIN- RESTORE/ REPAIR/ REPAINT AS REQD.

(E) WOOD FASCIA/ CORNICE TO REMAIN- RESTORE/ REPAIR/ REPAINT AS REQD.

(E) GUTTER TO REMAIN- REPLACE/ REPAIR AS REQD.

(E) BRICK CORNICE/ FASCIA TO REMAIN- RESTORE/ REPAIR AS REQD.

(E) COPPER DRIP EDGE TO REMAIN- REPAIR AS REQD.

REMOVE AC WINDOW UNITS- TYP. REPAIR/ REPLACE WINDOW SASH/ MUNTINS TO MATCH EXISTING

EXISTING WINDOWS / FRAMES TO REMAIN - REPAIR FRAMES / SILLS EPOXY PATCH WHERE ROTTED. REPAINT / CAULK ALL. - INSTALL NEW ½ SCREENS TYP. ALL WINDOWS AT FRONT EXCEPT DORMER WINDOWS

REMOVE AC WINDOW UNITS- TYP. REPAIR/ REPLACE WINDOW SASH/ MUNTINS

(E) CONNECTING FIRE BALCONY TO REMAIN- REPAIR/ REPAINT AS REQD.

CLEAN/ REPAIR/ REPOINT BRICK AS REQD.

(E) COPPER LEADER- REPAIR/ REPLACE AS REQD.

EXISTING WINDOWS / FRAMES TO REMAIN - REPAIR FRAMES / SILLS EPOXY PATCH WHERE ROTTED. REPAINT / CAULK ALL. - INSTALL NEW ½ SCREENS TYP. ALL WINDOWS AT FRONT EXCEPT DORMER WINDOWS

EXISTING WINDOWS / FRAMES TO REMAIN. REPAIR FRAMES / SILLS EPOXY PATCH WHERE ROTTED. REPAINT / CAULK ALL. INSTALL NEW ½ SCREENS TYP. ALL WINDOWS AT FRONT EXCEPT DORMER WINDOWS

REPAIR/ RESTORE (E) SPALLED STONE WINDOW HEADS/ SILLS - TO MATCH BROWNSTONE- TYP.

REMOVE VENT. PATCH/ REPAIR/ REPOINT BRICK

REPAIR/ RESTORE (E) SPALLED STONE WINDOW HEADS/ SILLS - TO MATCH BROWNSTONE- TYP.

CLEAN/ REPAIR/ REPOINT BRICK AS REQD.

(E) COPPER LEADER- REPAIR/ REPLACE AS REQD.

REPAIR/ REPAINT (E) DOWNSPOUT

REMOVE (E) FLAGPOLE- PATCH/ REPAIR BRICK AS REQD.

REMOVE (E) ENTRY HOOD/ PEDIMENT & ROOF & RESTORE/ REPAINT - REPLACE (E) COPPER DRIP EDGE/ FLASHING

(E) FIRE BALCONY TO REMAIN- REPAIR/ REPAINT STEEL BRACKETS/ RAILING AS REQD.

REMOVE (E) ENTRY HOOD/ PEDIMENT & ROOF & RESTORE/ REPAINT - REPLACE (E) COPPER DRIP EDGE/ FLASHING

(E) FIRE BALCONY TO REMAIN- REPAIR/ REPAINT AS REQD.

EXISTING FIRE DEPARTMENT EMERGENCY BEACON

(E) DOOR FRAME, TRANSOM & JAMB PANELLING TO REMAIN- RESTORE/ REPAINT

(E) ENTRY BRACKETS, PILASTERS, ROOF & TRIM- PATCH/ REPAIR AS REQD

(E) CONNECTING FIRE BALCONY TO REMAIN- REPAIR/ REPAINT AS REQD.

FIRE DEPARTMENT EMERGENCY BEACON

REPLACE WITH NEW LIGHT FIXTURE

REPLACE WITH NEW FIXTURE

REINSTALL DECORATIVE STEEL BRACKET TO MATCH EXISTING

NEW BRASS MAIL SLOT

REPLACE (E) LIGHT FIXTURE WITH NEW FIXTURE

REMOVE STAINED GLASS- INSTALL FIXED CLEAR GLASS

REMOVE STAINED GLASS @ INSIDE FACE OF EXISTING DOOR

(E) ENTRY BRACKETS, PILASTERS, & TRIM- PATCH/ REPAIR AS REQD

REPLACE (E) INTERCOM PANEL W/ NEW SURFACE MOUNT

(E) COPPER LEADER- REPAIR/ REPLACE AS REQD.

(E) ENTRY BRACKETS, PILASTERS, & TRIM- PATCH/ REPAIR AS REQD

RESTORE/ REPAIR BROWNSTONE - COLOR TO MATCH (E)

NEW BRASS MAIL SLOT

INSTALL NEW SURFACE MOUNT INTERCOM SYSTEM

REPAIR/ REPAINT EXISTING RAILINGS

INSTALL NEW SURFACE MOUNT INTERCOM SYSTEM

FRONT YARD ELEV. 97.5 (EXISTING AND PROPOSED)

(E) DOOR TO PASSAGEWAY TO REMAIN- REPAIR AS REQD.

YARD ELEV. = 95.7

EXISTING PANEL WOOD DOOR TO REMAIN- REPLACE/ REPAIR COPPER DRIP EDGE/ FLASHING- INSTALL COPPER SCUPPER

(E) STEEL POST-REPAINT/ REPAIR/ REPLACE AS REQD.

ELEV. 99.0

ELEV. 95.1

ELEV. 95.5

FRONT YARD ELEV. = 97.9

ELEV. 93.8

ELEV. 97.5

ELEV. 99.5

ELEV. 99.9

CLEAN EXISTING CURB RESET CORNER & REPAIR FENCE AS REQ'D - REPOINT ALL JOINTS

REPAIR/ REPAINT EXISTING RAILINGS- ADD NEW ORNATE BALUSTERS AS SHOWN

INSTALL NEW PTD. HANDRAIL SYSTEM

(E) GATE TO REMAIN- RESTORE/ REPAINT AS REQD.

RESTORE & REFINISH EXIST. ENTRY DOOR- FRAME, JAMBS HEAD, ETC.- INSTALL NEW BRASS HARDWARE & KICK PLATE

NEW STOOP WITH PRE CAST CONC. STAIRS TO MATCH (E) @ BUILDING-4 - SEE 2/A5

REMOVE (E) RAMP/ CURB/ RAILING SYSTEM

REPAIR/ REPAINT EXISTING RAILINGS- ADD NEW ORNATE BALUSTERS AS SHOWN

CLEAN EXISTING CURB RESET CORNER & REPAIR FENCE AS REQ'D - REPOINT ALL JOINTS

REPAIR, CLEAN AND REPOINT (E) GRANITE STAIRS, STONE BASE, CURBS AND STAIR CURBS

RESTORE & REFINISH EXIST. ENTRY DOOR- FRAME, JAMBS HEAD, ETC.- INSTALL NEW BRASS HARDWARE & KICK PLATE

CLEAN EXISTING GRANITE CURB RESET CORNER & REPAIR FENCE AS REQ'D - REPOINT ALL JOINTS

REPAIR/ REPAINT EXISTING RAILINGS

RESTORE & REFINISH EXIST. ENTRY DOOR- FRAME, JAMBS HEAD, ETC.- INSTALL NEW BRASS HARDWARE & KICK PLATE

CLEAN/ REPAINT/ POINT (E) STAIRS/ STONE WORK

3, 4, 5 JOY STREET FRONT ELEVATION

SCALE: 1/4"=1'-0"

46 Waltham Street, Suite 3A
Boston, MA 02118
Phone 617-956-9992
Fax 917-956-9993

GD GRASSI DESIGN GROUP
BG BEAUCHEMIN GRASSI INTERIORS

JOB NO.: 1606
SCALE: 1/4"=1'-0"
DATE: 02.10.17
REVISED

3, 4, 5 JOY STREET
BOSTON, MA

FRONT ELEVATION

A11

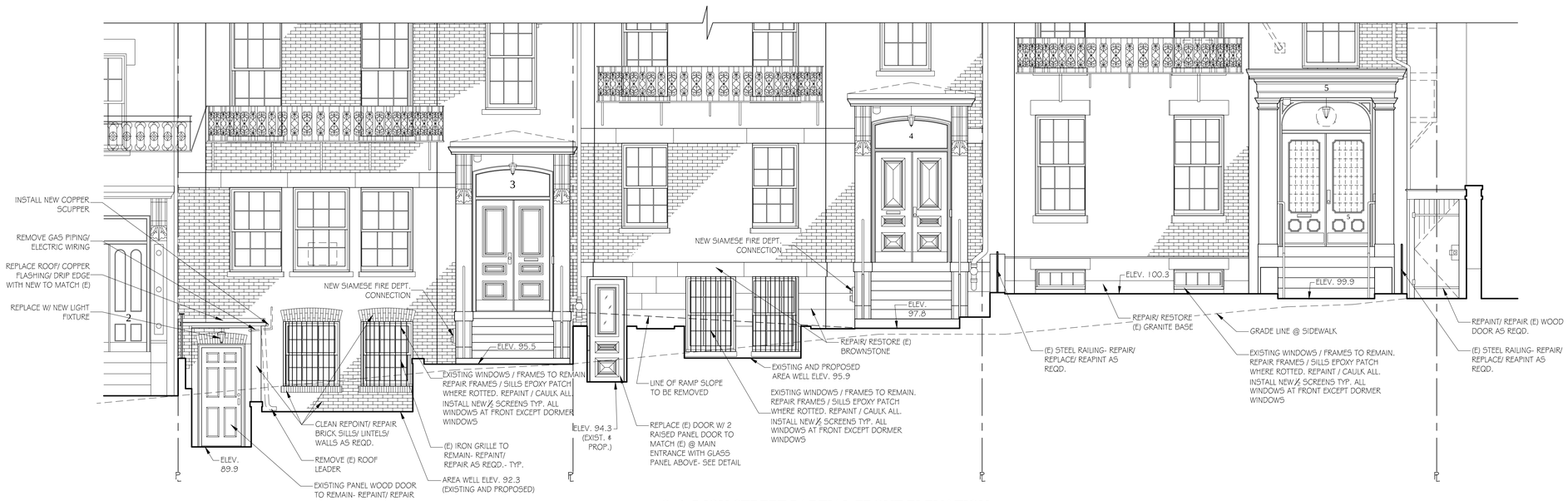

3, 4, 5 JOY STREET PARTIAL FRONT ELEVATION

SCALE: 1/4"=1'-0"

GRASSI DESIGN GROUP
46 Waltham Street, Suite 3A
Boston, MA 02118
Phone 617-956-9992
Fax 917-956-9993
BEAUCHEMIN GRASSI INTERIORS

JOB NO.: 1606
SCALE: 1/4"= 1'-0"
DATE: 02.10.17
REVISED

3, 4, 5 JOY STREET
BOSTON, MA

PARTIAL ELEVATION

A12

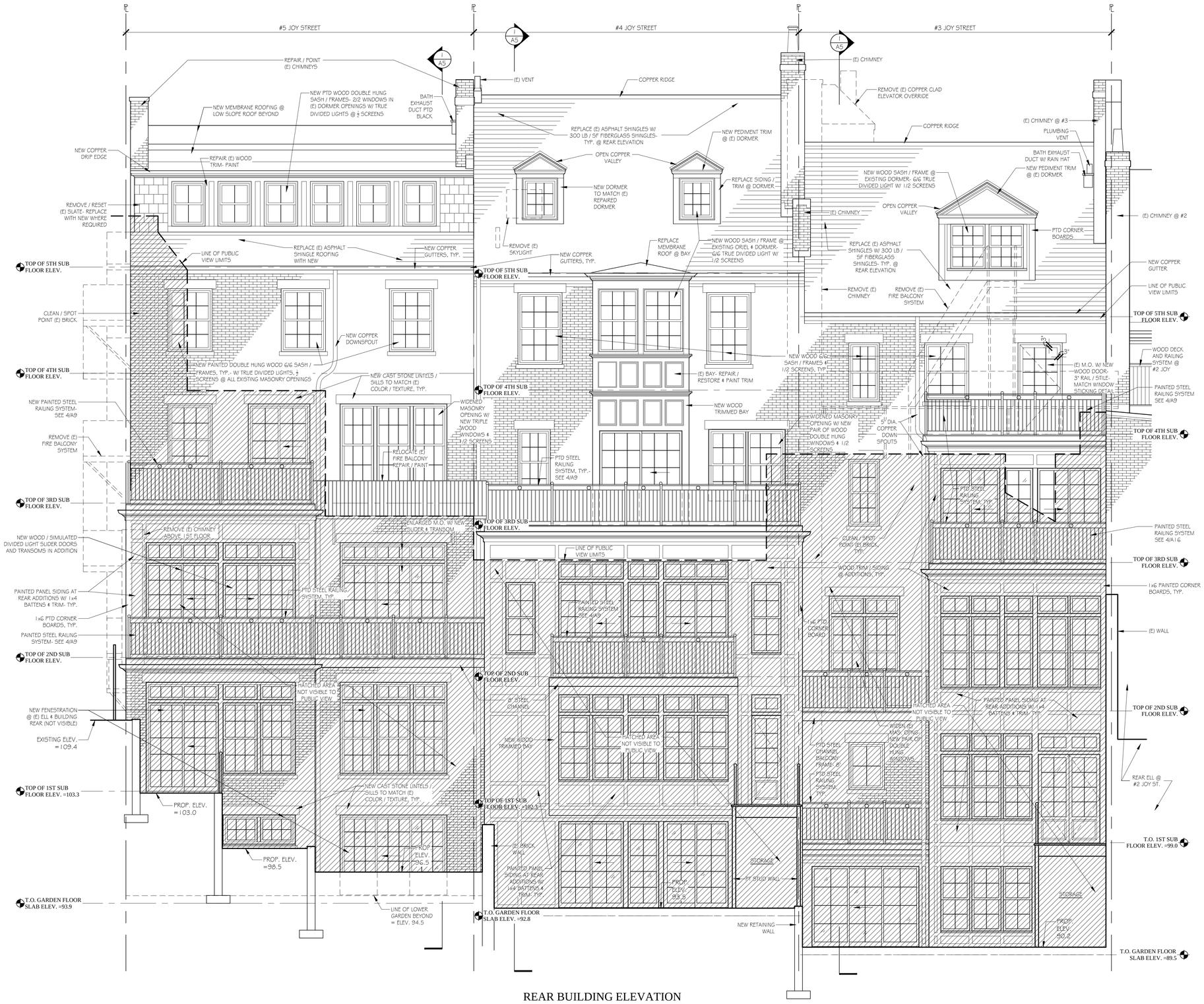

REAR BUILDING ELEVATION

SCALE: 1/4"=1'-0" (FACING EAST)

46 Waltham Street, Suite 3A
Boston, MA 02118
Phone 617-956-9992
Fax 917-956-9993

GD GRASSI DESIGN GROUP
BG BEAUCHEMIN GRASSI INTERIORS

JOB NO.: 1606
SCALE: 1/4" = 1'-0"
DATE: 02.10.17
REVISED

3, 4, 5 JOY STREET

BOSTON, MA

REAR ELEVATION

A13

ELEVATION FROM 8 WALNUT REAR YARD

SCALE: 1/4"=1'-0" (LOOKING EAST)

GRASSI DESIGN GROUP
46 Waltham Street, Suite 3A
Boston, MA 02118
Phone 617-956-9992
Fax 917-956-9993
BEAUCHEMIN GRASSI INTERIORS

JOB NO.: 1606
SCALE: 1/4"= 1'-0"
DATE: 02.10.17
REVISED

3 JOY STREET
BOSTON, MA

ELEVATION FROM 8 WALNUT
REAR YARD (LOOKING EAST)

A15

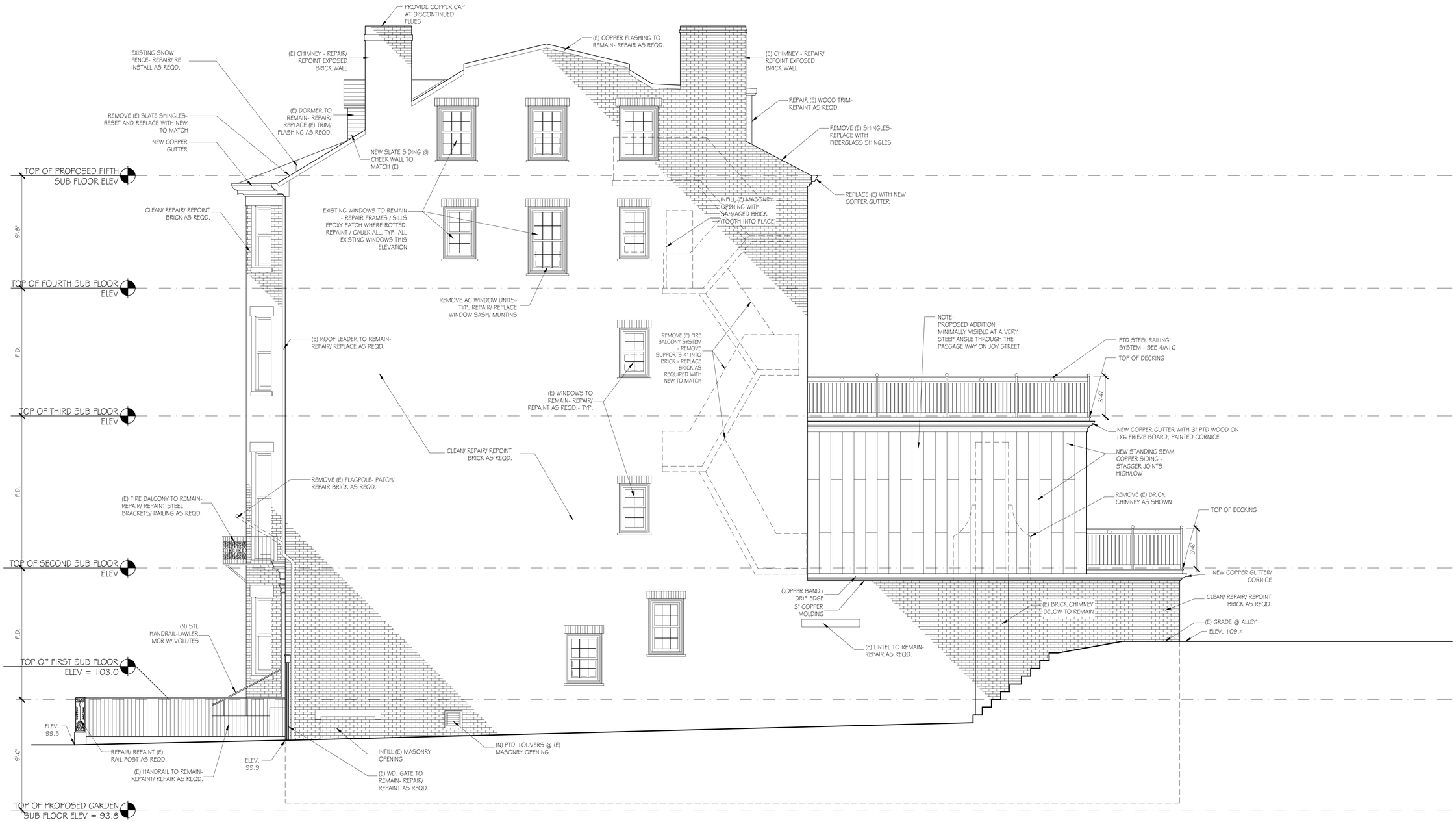

5 JOY STREET - NORTH BUILDING ELEVATION

SCALE: ¼" = 1'-0"

GRASSI DESIGN GROUP
46 Waltham Street, Suite 3A
Boston, MA 02118
Phone 617-956-9992
Fax 917-956-9993
BEAUCHEMIN GRASSI INTERIORS

JOB NO.: 1606
SCALE: 1/4" = 1'-0"
DATE: 02.10.17
REVISED

5 JOY STREET
BOSTON, MA

NORTH BUILDING
ELEVATION - #5 JOY ST

A8

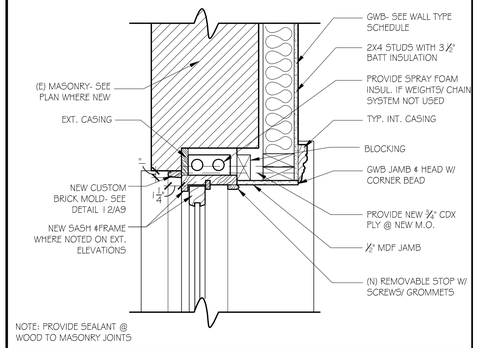

NOTE: PROVIDE SEALANT @ WOOD TO MASONRY JOINTS

1 WINDOW JAMB DETAIL IN EXISTING MASONRY OPENING WITH REPLACEMENT WINDOW (HEAD SIM.) 1½" = 1'-0"

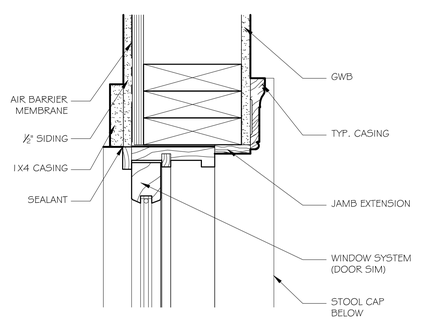

2 WINDOW HEAD DETAIL IN STUD WALL @ ADDITION (JAMB SIMILAR) 3" = 1'-0"

3 NOT USED

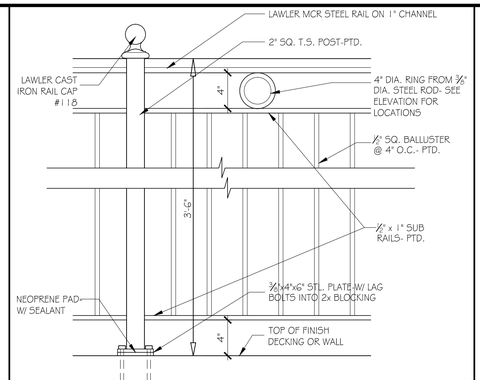

4 RAILING @ ROOF DECK DETAIL 1 ½"= 1'-0"

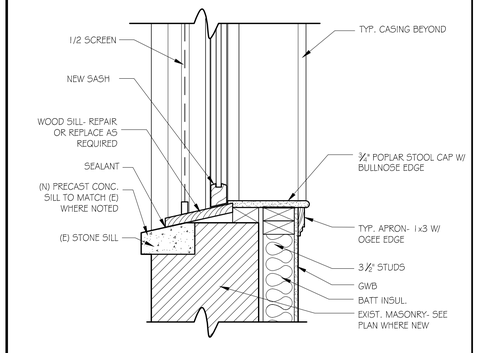

5 WINDOW SILL DETAIL IN (E) MASONRY OPENING WITH REPLACEMENT WINDOW 1½" = 1'-0"

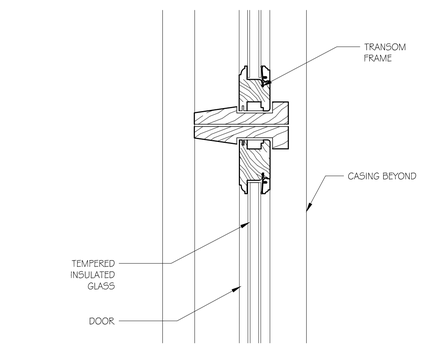

6 EXTERIOR DOOR HEAD DETAIL (JAMB SIM.) 3"= 1'-0"

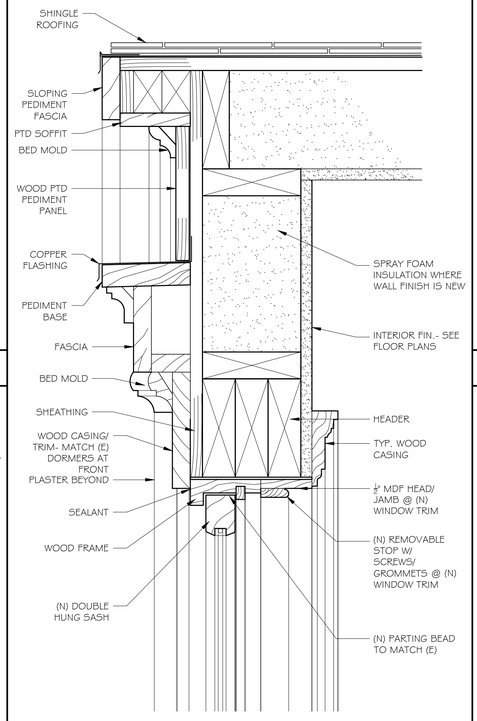

10 DORMER WINDOW HEAD DETAIL @ REAR 3" = 1'-0"

7 NOT USED

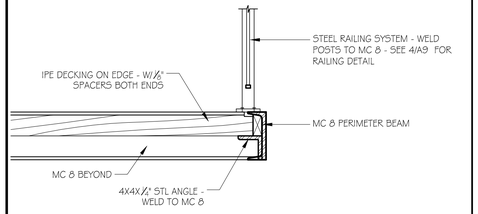

8 BALCONY AT EDGE DETAIL 1" = 1'-0"

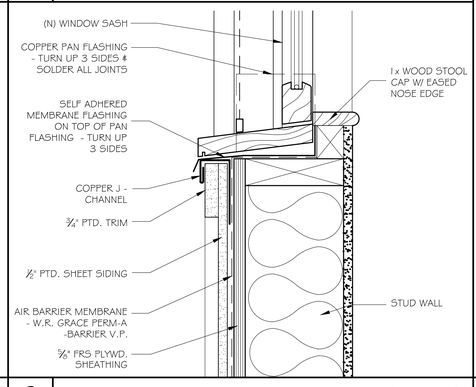

9 WINDOW SILL @ ADDITION STUD WALL 3" = 1'-0"

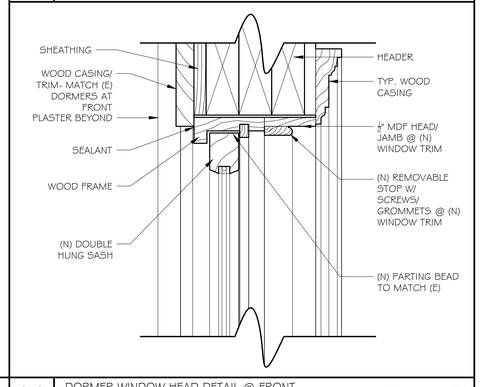

11 DORMER WINDOW HEAD DETAIL @ FRONT (JAMB SIMILAR FRONT & REAR) 3" = 1'-0"

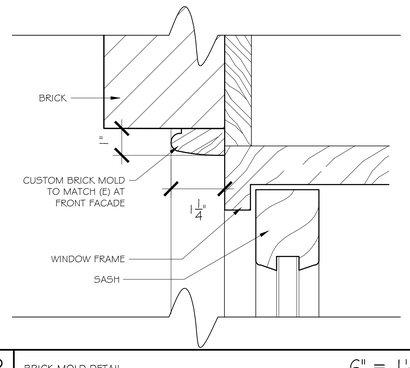

12 BRICK MOLD DETAIL 6" = 1'-0"

13 NOT USED

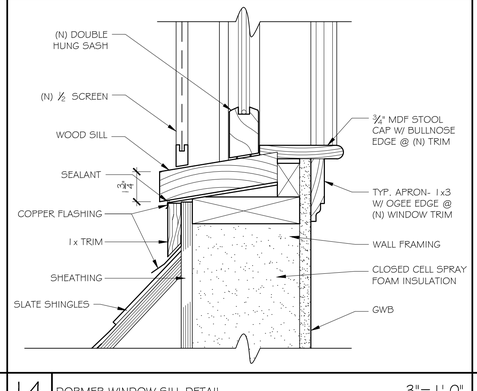

14 DORMER WINDOW SILL DETAIL 3"= 1'-0"

15 NOT USED

16 NOT USED

GD GRASSI DESIGN GROUP
BG BEAUCHEMIN GRASSI INTERIORS
46 Waltham Street, Suite 3A
Boston, MA 02118
Phone 617-956-9992
Fax 917-956-9993

JOB NO.: 1606
SCALE: AS NOTED
DATE: 02.10.17
REVISED

3, 4, 5 JOY STREET
BOSTON, MA

WINDOW AND EXTERIOR DETAILS

A9

REAR BUILDING ELEVATION
SCALE: 1/4"=1'-0" (FACING EAST)

GRASSI DESIGN GROUP
46 Waltham Street, Suite 3A
Boston, MA 02118
Phone 617-956-9992
Fax 917-956-9993
BEAUCHEMIN GRASSI INTERIORS

JOB NO: 1606
SCALE: 1/4" = 1'-0"
DATE: 01.18.17
REVISED

3-5 JOY STREET
BOSTON, MA

REAR ELEVATION

A8

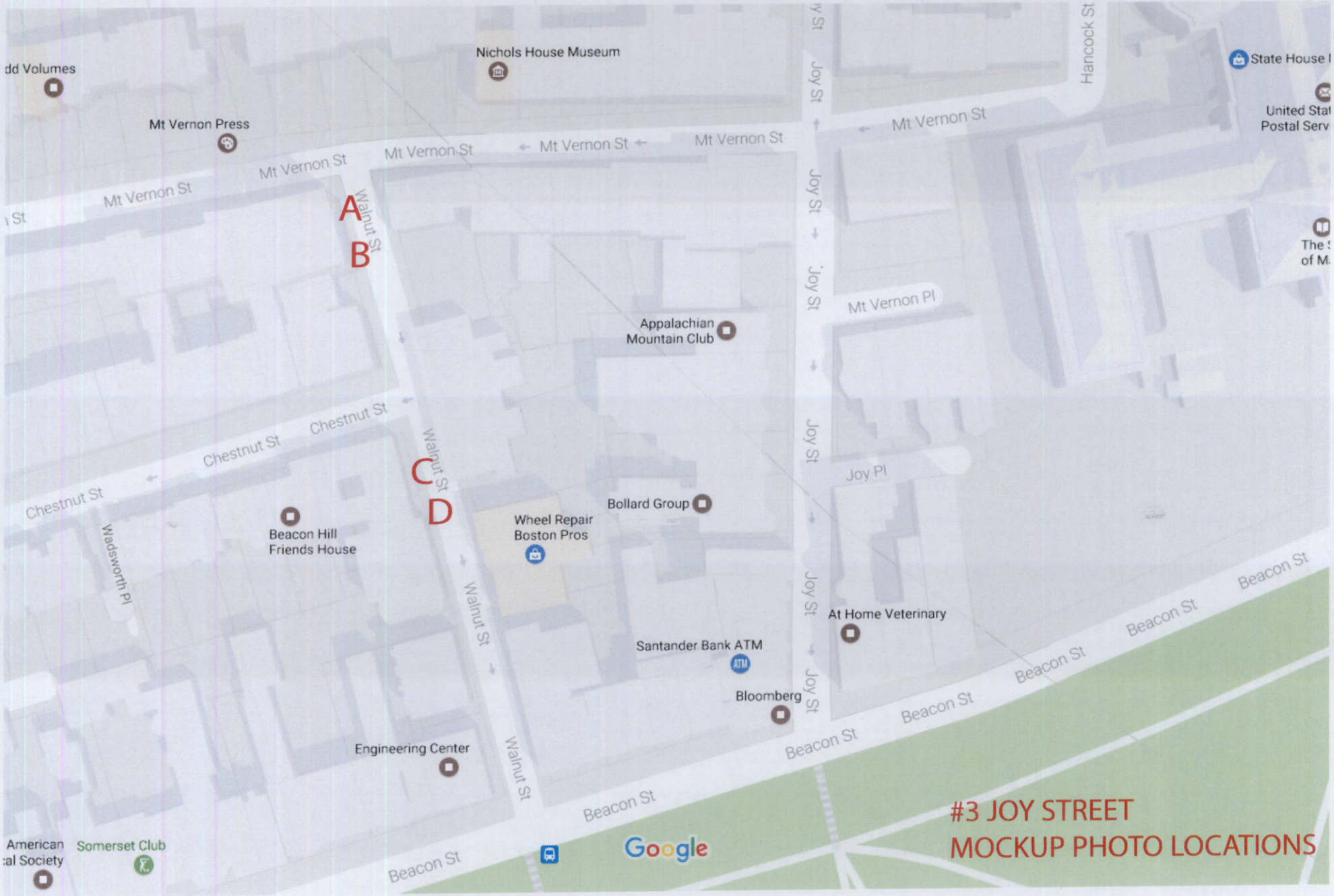
Nichols House Museum
Mt Vernon Press
Mt Vernon St
Mt Vernon St
Mt Vernon St
Mt Vernon St
Mt Vernon St
Walnut St
A
B
Joy St
Hancock St
Mt Vernon St
Mt Vernon Pl
Appalachian Mountain Club
Chestnut St
Chestnut St
Chestnut St
Walnut St
C
D
Joy Pl
Bollard Group
Wheel Repair Boston Pros
Beacon Hill Friends House
Wadsworth Pl
Walnut St
Joy St
At Home Veterinary
Santander Bank ATM
Bloomberg
Beacon St
Beacon St
Beacon St
Beacon St
Beacon St
Engineering Center
Walnut St
Beacon St
Somerset Club
Google
#3 JOY STREET
MOCKUP PHOTO LOCATIONS

TOW ZONE
NO
STOPPING
ANY
TIME
Beacon Hill
Resident
Permit
Parking
Only

MOCKUP #3-A

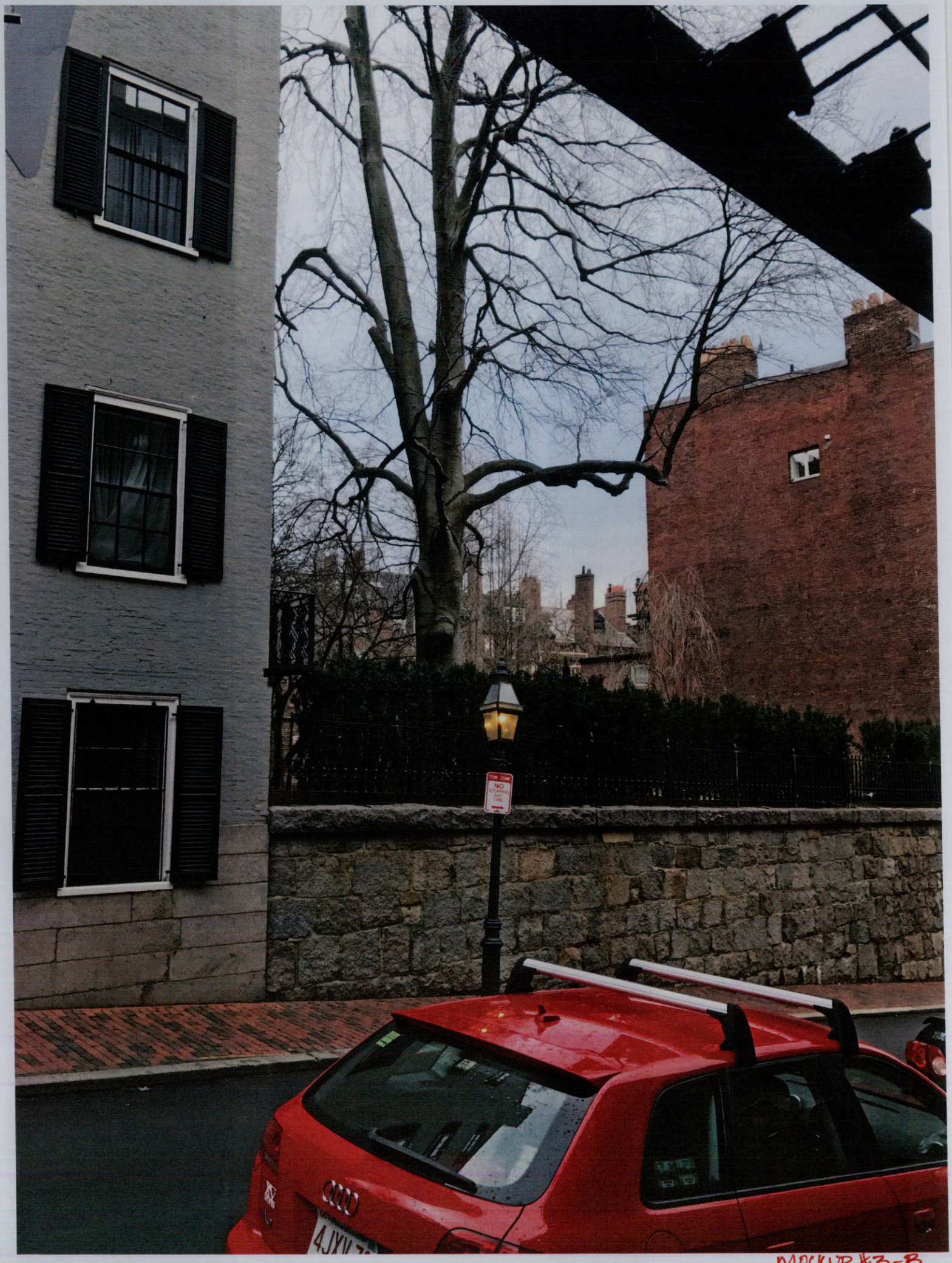

MOCKUP #3-B

MOCKUP #3-C

MOCKUP #3-D

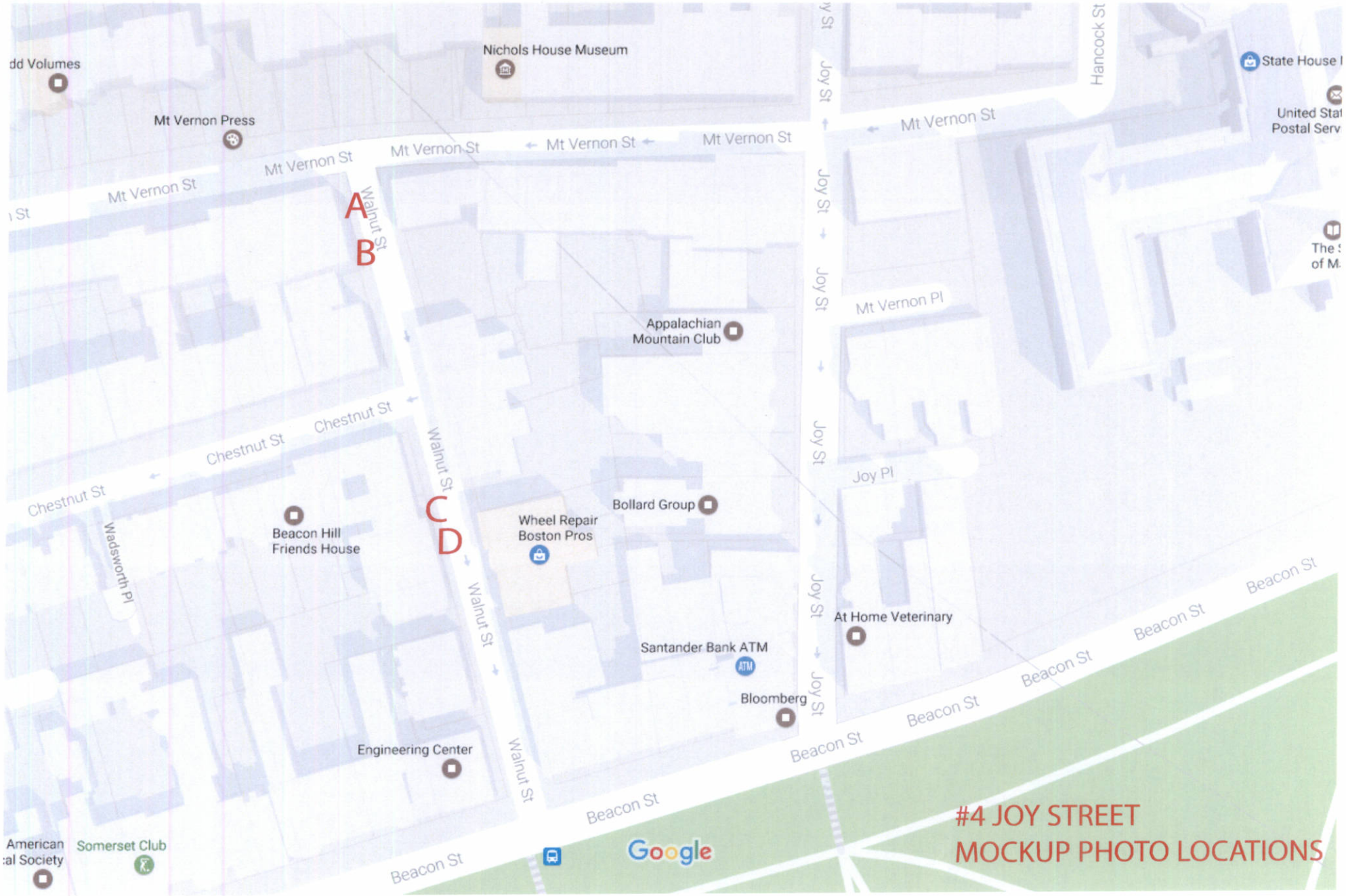
Nichols House Museum
Mt Vernon Press
Mt Vernon St
Mt Vernon St
Mt Vernon St
Mt Vernon St
Mt Vernon St
Walnut St
A
B
Joy St
Hancock St
Mt Vernon St
Joy St
Joy St
Mt Vernon Pl
Appalachian Mountain Club
Chestnut St
Chestnut St
Chestnut St
Walnut St
C
D
Joy St
Joy Pl
Bollard Group
Wheel Repair Boston Pros
Beacon Hill Friends House
Wadsworth Pl
Walnut St
Joy St
At Home Veterinary
Santander Bank ATM
Bloomberg
Beacon St
Beacon St
Beacon St
Beacon St
Beacon St
Engineering Center
Walnut St
Beacon St
Somerset Club
Google
#4 JOY STREET
MOCKUP PHOTO LOCATIONS

TOW ZONE
NO
STOPPING
ANY
TIME
Beacon Hill
Resident
Permit
Parking
Only

MOCKUP #4-A

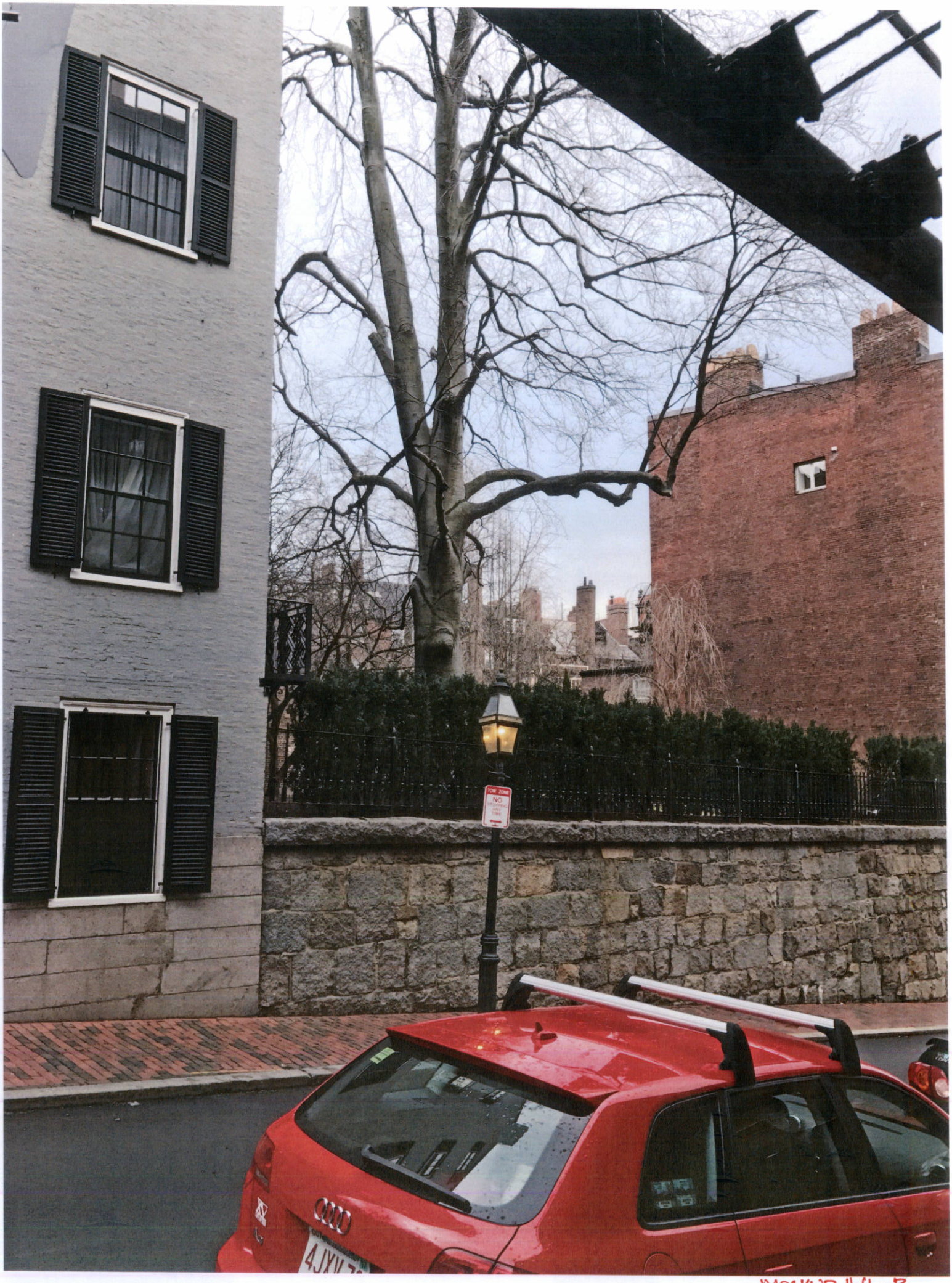

MOCKUP #4 - B

MOCKUP #4 - C

MOCKUP #4-D

Nichols House Museum
Mt Vernon Press
Mt Vernon St
Mt Vernon St
Mt Vernon St
Mt Vernon St
Mt Vernon St
Joy St
Hancock St
Walnut St
C
D
A
B
Mt Vernon Pl
Appalachian Mountain Club
Chestnut St
Chestnut St
Chestnut St
Walnut St
Joy St
Joy Pl
Wadsworth Pl
Beacon Hill Friends House
E
Wheel Repair Boston Pros
Bollard Group
At Home Veterinary
Santander Bank ATM
Bloomberg
Engineering Center
Beacon St
Beacon St
Beacon St
Beacon St
Beacon St
Somerset Club
Google
#5 JOY STREET
MOCKUP PHOTO LOCATIONS

MOCKUP #5-A

MOCKUP #5-B

TOW ZONE
NO
STOPPING
ANY
TIME
Beacon Hill
Resident
Permit
Parking
Only

MOCKUP #5-C

MOCKUP #5-D

MOCKUP #5-E

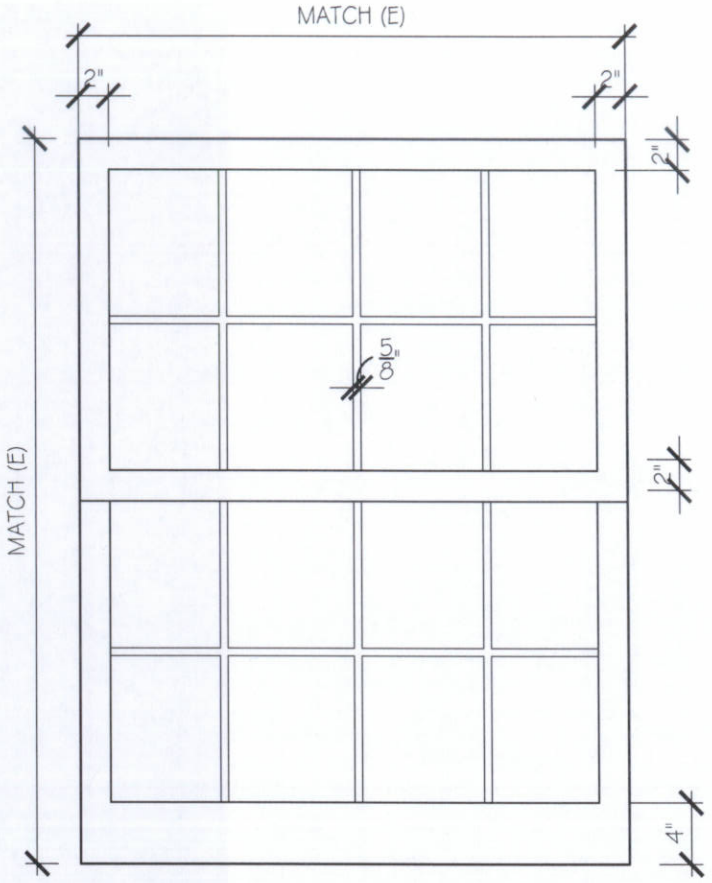

WINDOW ELEVATION

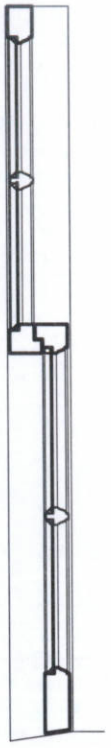

WINDOW SECTION

3 JOY STREET
BOSTON MA

SCALE: 1"= 1'-0"
JOB #: 1606
DATE: 02.10.17

EXISTING AND PROPOSED FRONT DORMER WINDOW ELEVATION AND SECTION

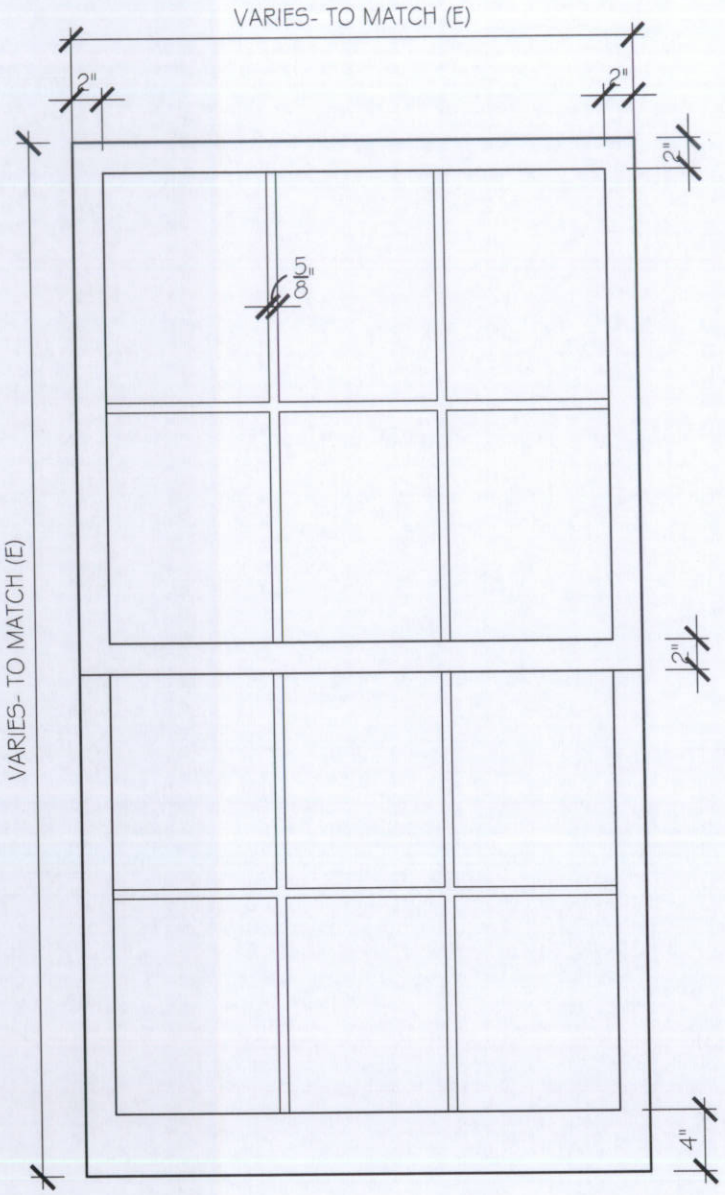

WINDOW ELEVATION

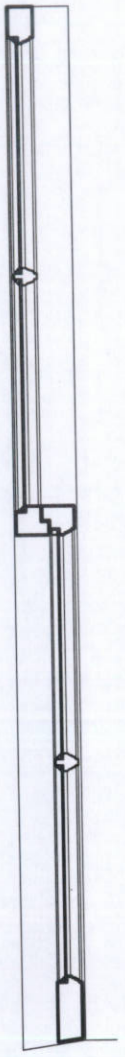

WINDOW SECTION

3 JOY STREET
BOSTON MA

SCALE: 1"= 1'-0"
JOB #: 1606
DATE: 02.10.17

REPLACEMENT WINDOWS @ REAR - (DORMERS AND EXISTING MASONRY OPENINGS)

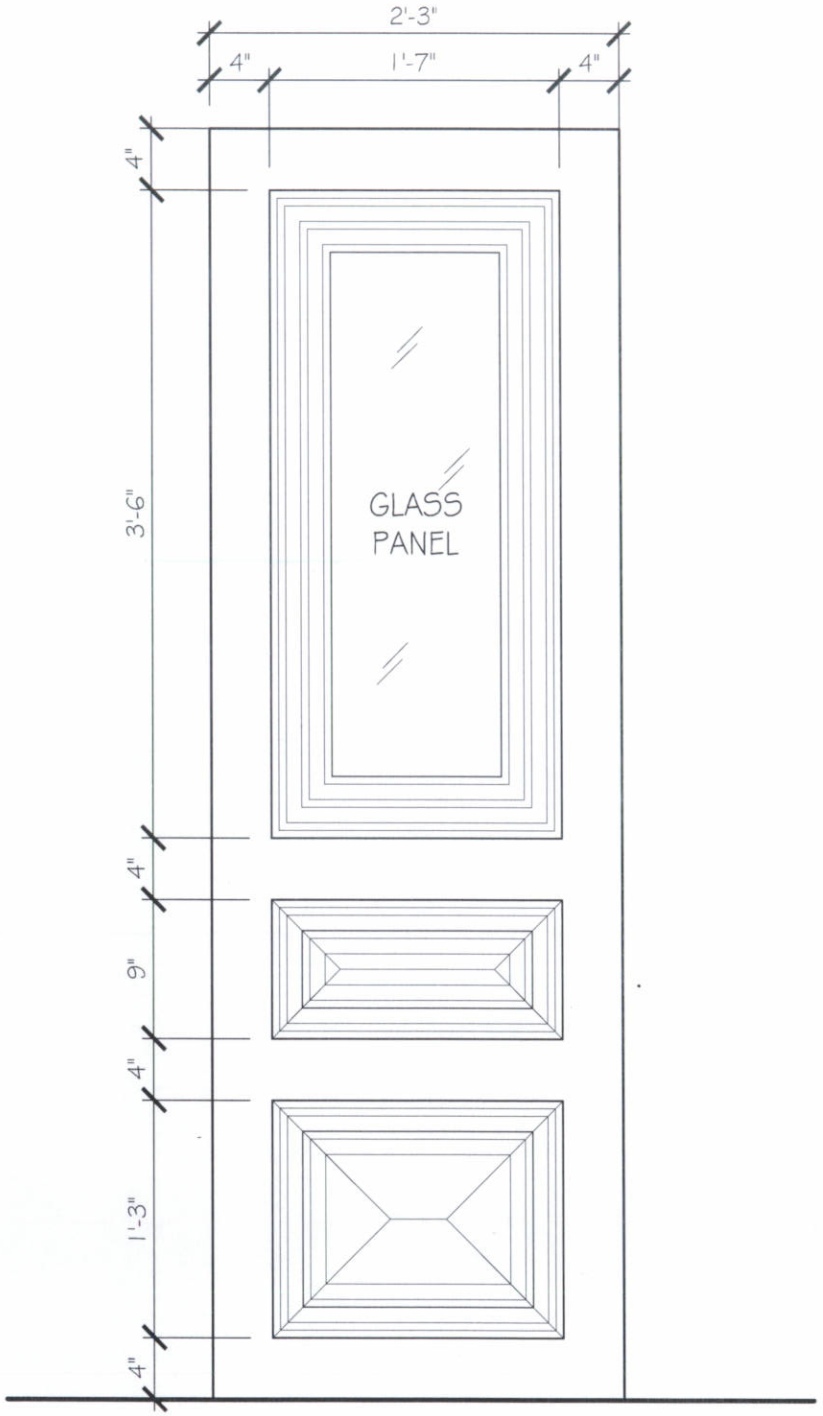

DOOR ELEVATION

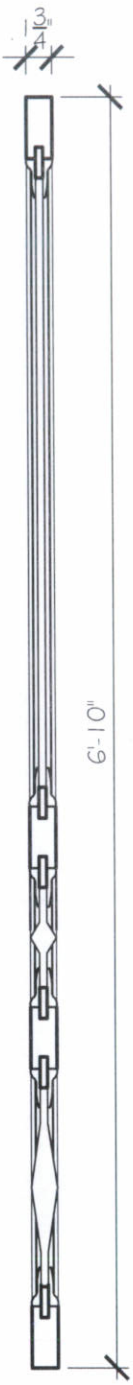

DOOR SECTION

DOOR FINISH : PAINTED BLACK

HARDWARE: BALDWIN MORTISE LOCK & CYLINDER WITH
6963-BRISTOL ESTATE HANDLE SET- POLISHED BRASS FINISH

REPLACEMENT DOOR GARDEN AT #4

4 JOY STREET
BOSTON MA

SCALE: 1"= 1'-0"
JOB #: 1606
DATE: 02.10.17

GRASSI DESIGN GROUP
46 Waltham Street, Suite 3A
Boston, MA 02118
Phone 617-956-9992
Fax 917-956-9993

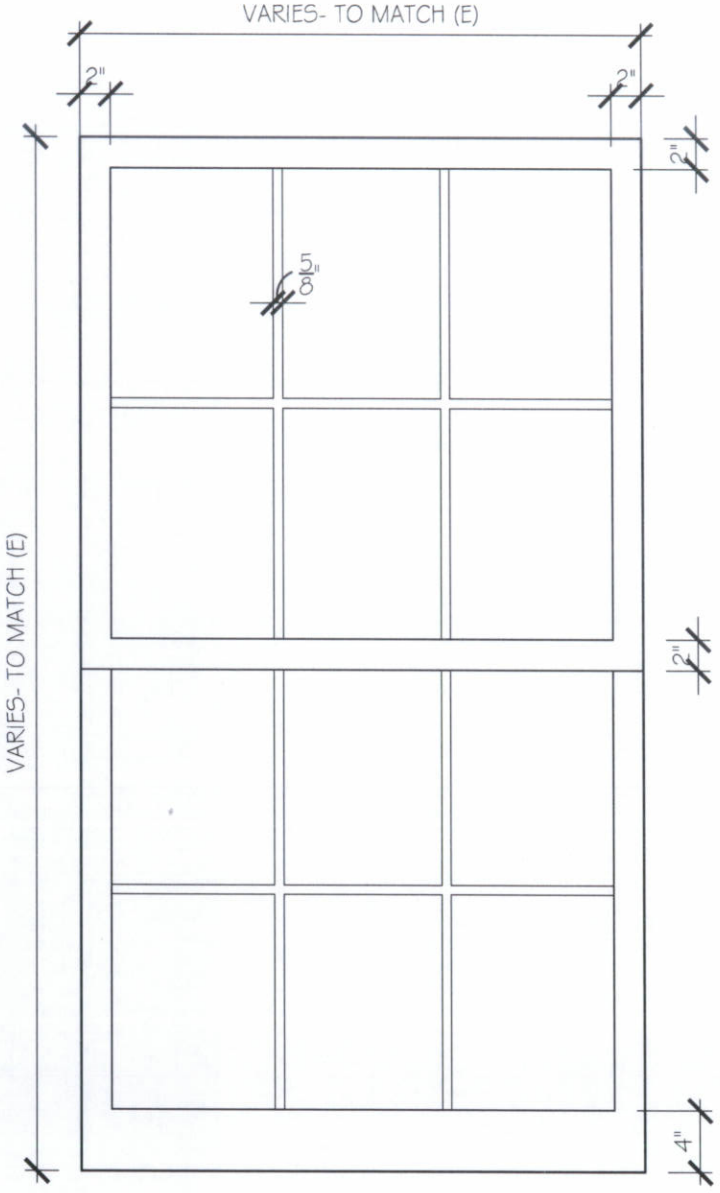

WINDOW ELEVATION

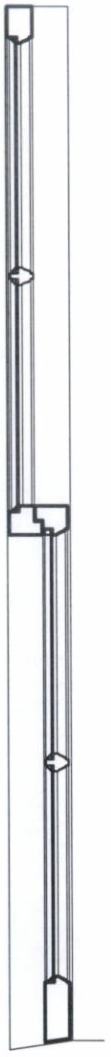

WINDOW SECTION

4 JOY STREET

BOSTON MA

SCALE: 1"= 1'-0"
JOB #: 1606
DATE: 02.10.17

PROPOSED FRONT AND REAR DORMER WINDOWS AND REAR REPLACEMENT WINDOWS @ EXISTING MASONRY OPENINGS

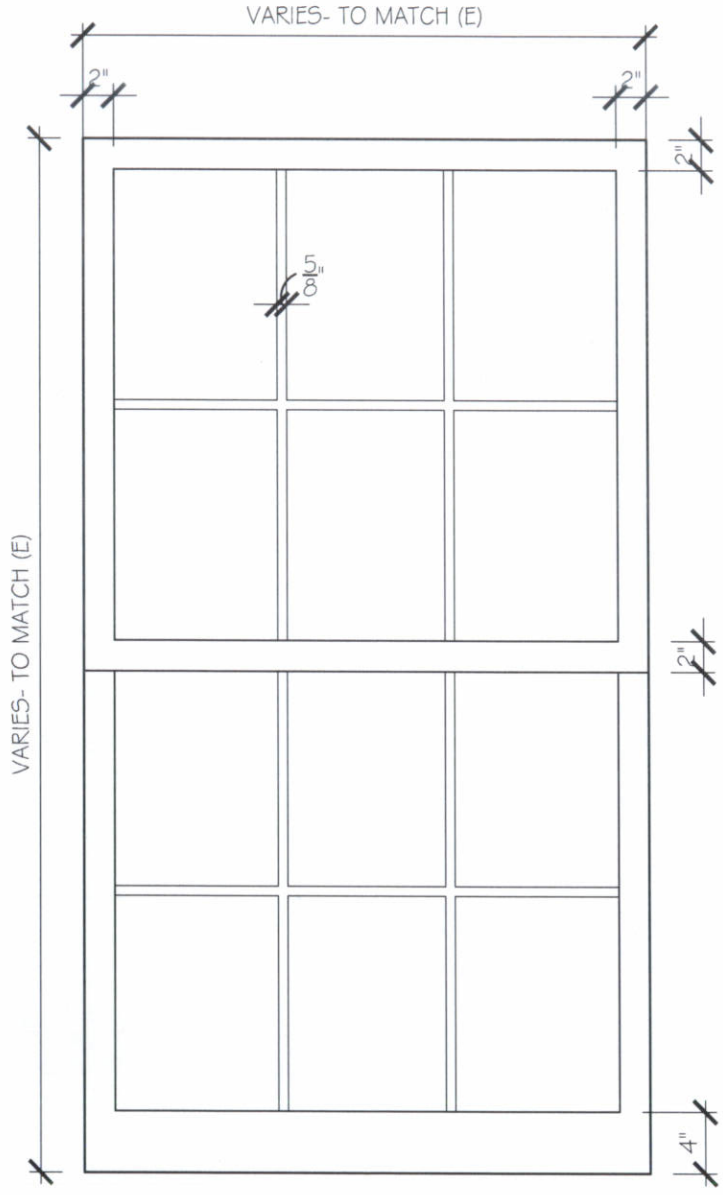

WINDOW ELEVATION

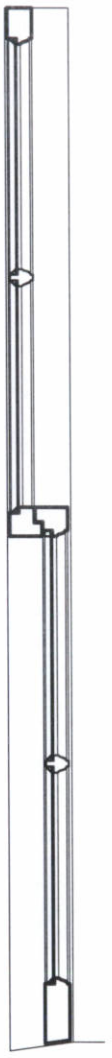

WINDOW SECTION

5 JOY STREET

BOSTON MA

SCALE: 1"= 1'-0"
JOB #: 1606
DATE: 02.10.17

PROPOSED FRONT DORMER WINDOW

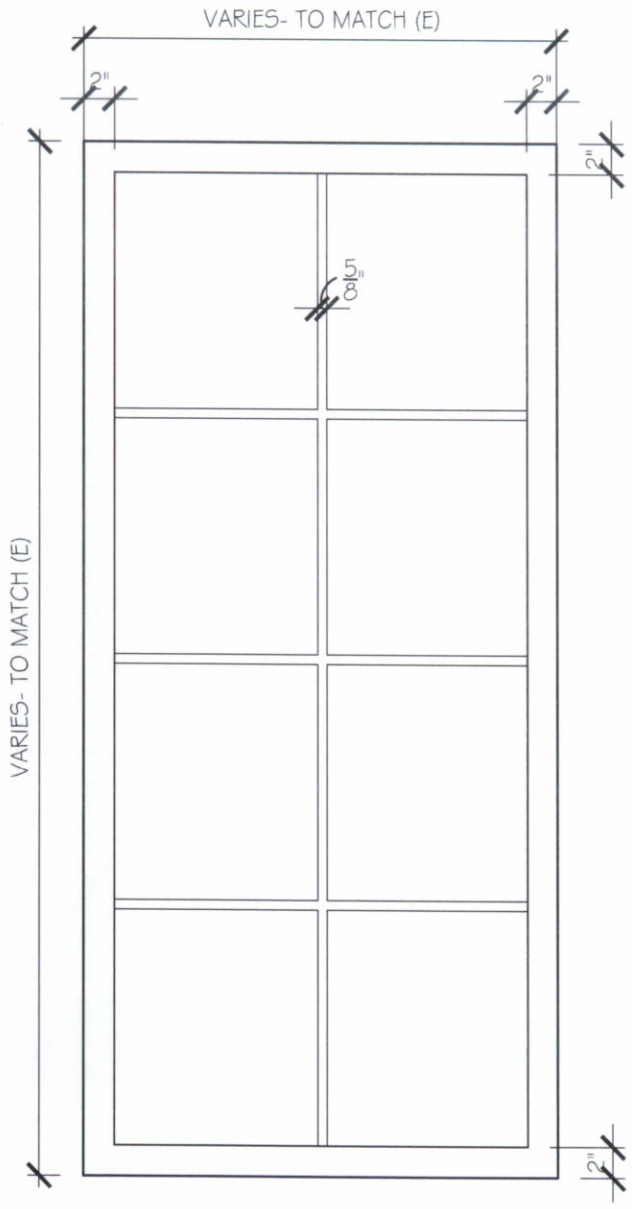

WINDOW ELEVATION

WINDOW SECTION

5 JOY STREET
BOSTON MA

SCALE: 1"= 1'-0"
JOB #: 1606
DATE: 02.10.17

PROPOSED FRONT DORMER CASEMENT WINDOW

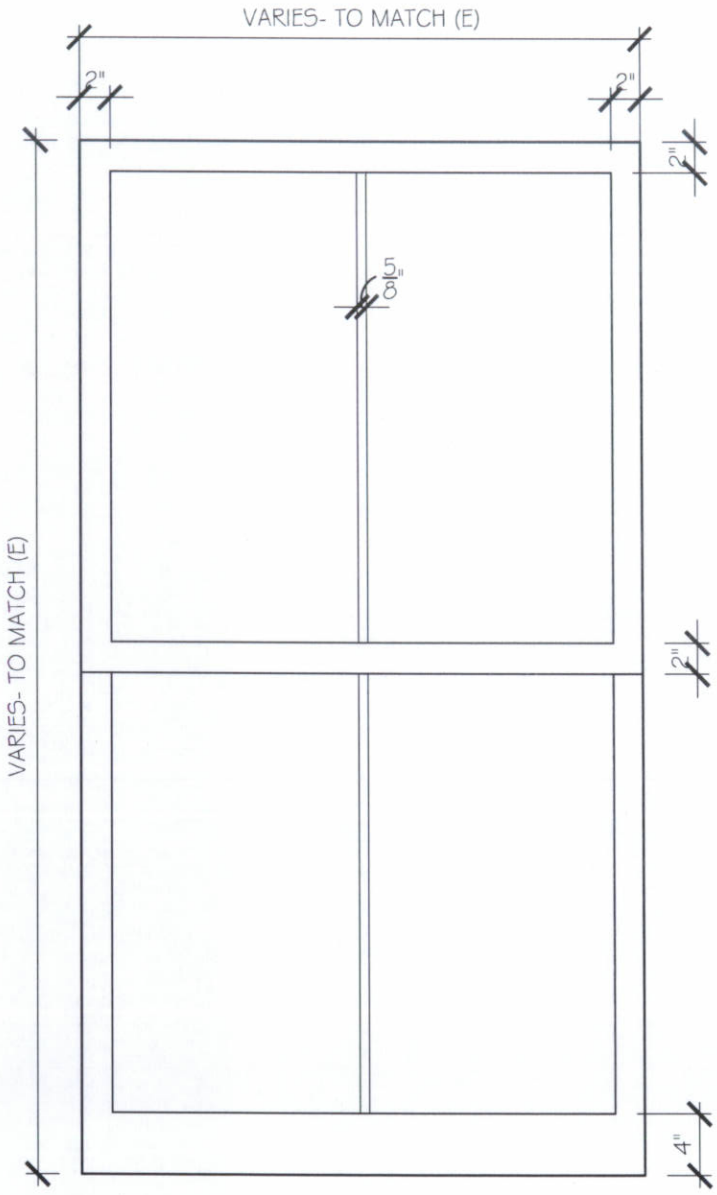

WINDOW ELEVATION

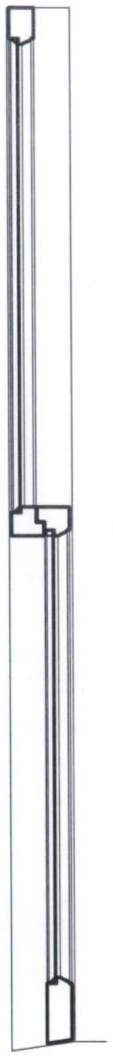

WINDOW SECTION

5 JOY STREET

BOSTON MA

SCALE: 1"= 1'-0"
JOB #: 1606
DATE: 02.10.17

PROPOSED REAR DORMER WINDOWS

WOOD ULTIMATE DOUBLE HUNG

SECTION DETAILS: OPERATING ONLY

SCALE: 3" = 1' 0"

FOR WINDOWS IN REAR ADDITIONS -

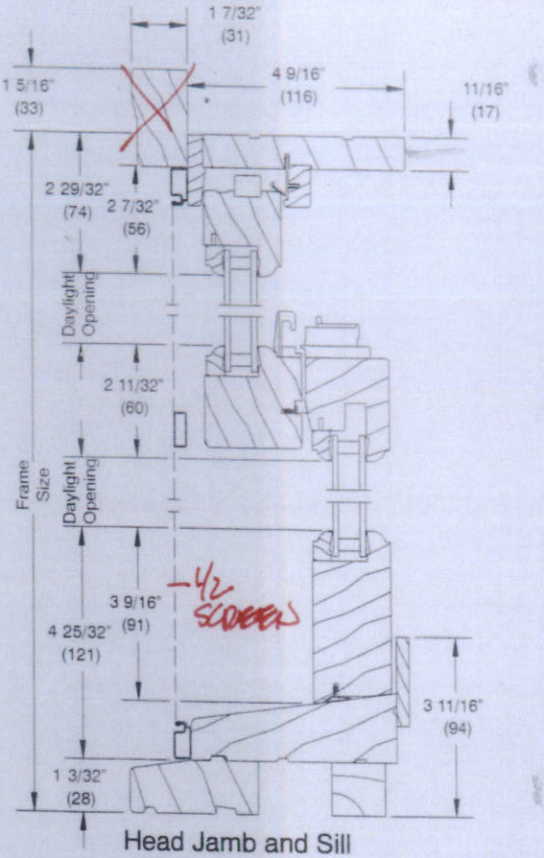

Head Jamb and Sill

Double Hung

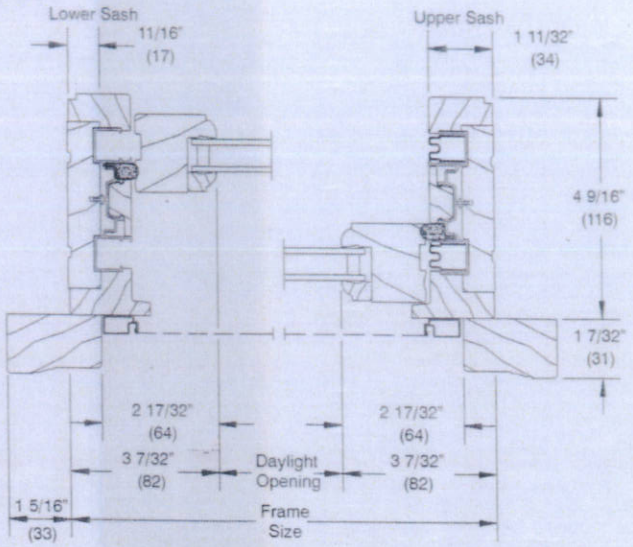

Double Hung Jambs
Lower and upper sash

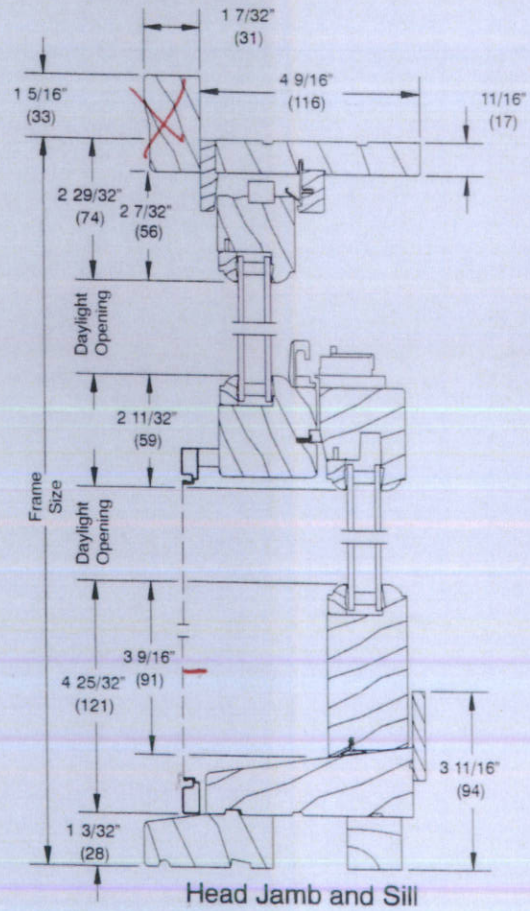

Head Jamb and Sill

Single Hung

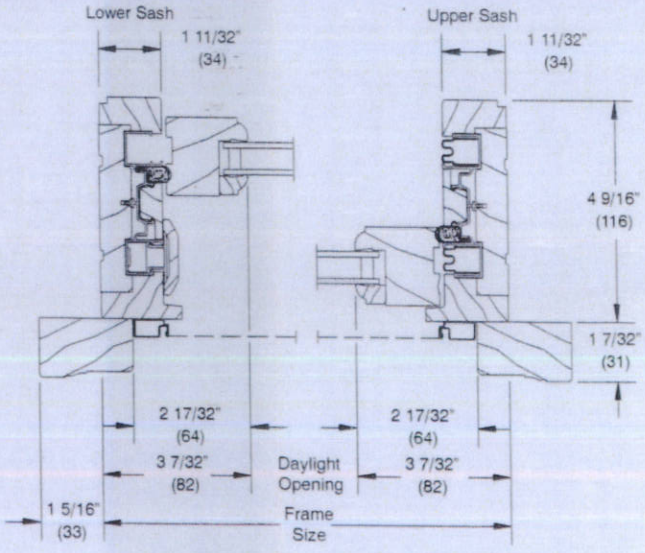

Single Hung Jambs
Lower and upper sash

NOTE:
Optional half screen shown.

WOOD TRIMLINE PATIO DOOR

SECTION DETAILS: 4 9/16" AND 6 9/16" SIDELITE

SCALE: 3" = 1'0"

WOOD SLIDING DOORS @ REAR ADDITIONS -

4 9/16" Sidelite

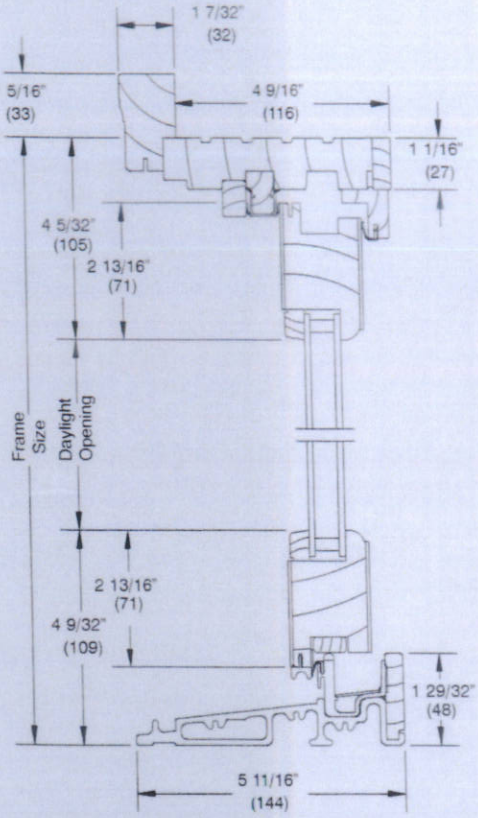

Head Jamb and Sill

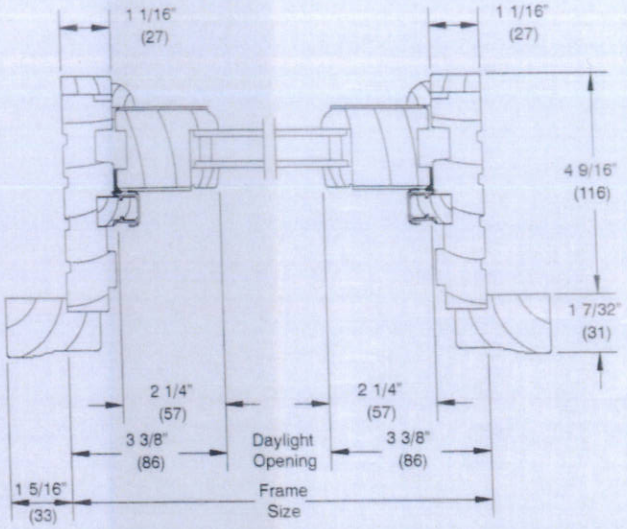

Jambs

6 9/16"

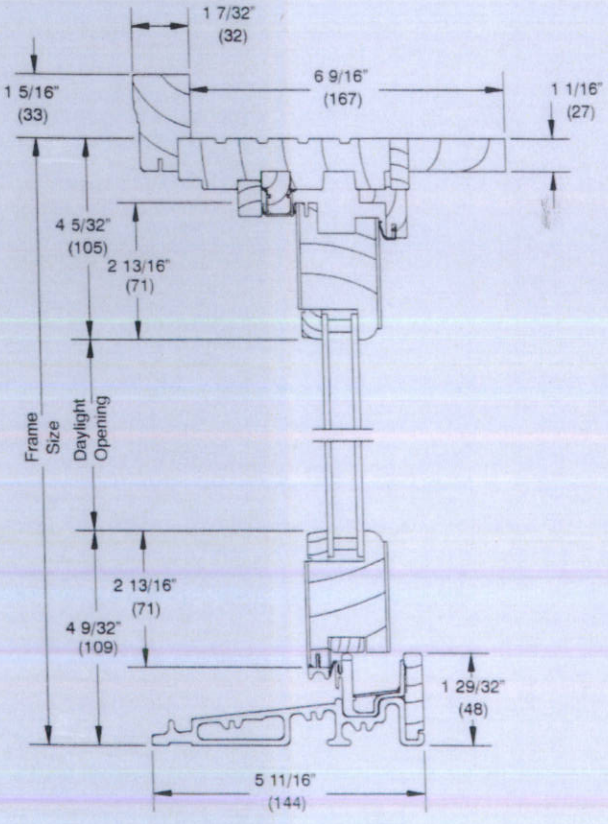

Head Jamb and Sill

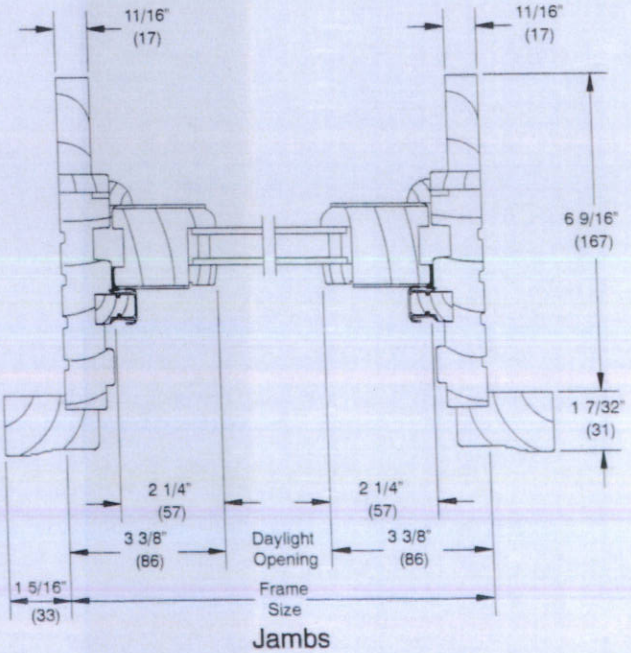

Jambs

The Lawler Line®

Product Information

Item No.: 4-X
Molded Volute

Dimensions:
Width: 1 3/4 in.
Rail end for Molded Cover Rail

Weight:
1.75 lb.

<< Back to Search

VOLUTE @ FRONT STOOP HANDRAIL

The Lawler Line®

Product Information

Item No.: MCR
Molded Cover Rail

Dimensions:
Height: 1/2 in.
Width: 1 3/4 in.

Weight:
24 lb.

<< Back to Search

*PROVIDE 1" CHANNEL TO MOUNT RAIL COVER

HANDRAIL @ FRONT STOOP & DECK RAILS

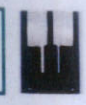

Kensington 3 Light Outdoor Hanging Lantern by Savoy House

4.5 stars 35 Reviews | 6 Questions Answered

$96.00 ~~$130.00~~ 30% Off

FREE Shipping
Get it by Wed, Feb 1

Buy today, get free shipping for the next 30 days

Select Finish: **Textured Black**

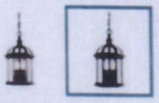

Quantity: 1

Add to Cart | Save to Idea Board

Shop more from Kensington Collection by Savoy House

Shopping for a client? Unlock insider pricing and more member perks

Need a personal shopper? Get free help from our lighting experts. Call Us

Product Information:

- 10+ in Stock
- Fixture: 13.75" H x 8.25" W

Customers Also Viewed

1 Light Outdoor Han...
4.5 stars
$35.99

Kensington 1 Light ...
4.5 stars
$104.00

3 Light Outdoor Ha...
5 stars
$71.99

Saddler 2 Light Out...
4 stars
$143.99

New Street 1 Light ...
4.5 stars
$54.90

FRONT ENTRY PENDANT LIGHT

AMERICAN FIRE HOSE & CABINET

Fire Department Connections

Flush Mount Wall Hydrants / Test Headers (Without Valves)

A hydrant provides an auxiliary outlet for fire department use, while a test header provides a means to flow test a fire pump. These flush mounted units feature a body that's typically concealed behind a wall with only the plate, male snoots, and caps exposed.

250 GPM per outlet

- **2-way Standard Equipment: Units are equipped with a brass concealed body, wall plate, 2½" F NPT x 2½" M NST gate valves (loose bonnet style) and 2½" caps.**
- **3-way, 4-way, and 6-way Standard Equipment: Units are equipped with a 6061-T6 aluminum concealed body, wall plate, 3" F NPT x 2½" M NST gate valves (loose bonnet style), and 2½" caps.**

POLISHED BRONZE

420RBWH

Part #	Type	Size & Configuration	Inlet Type	Inlet Location	A	B	C
420	2-Way	4" x 2½" x 2½"	Female NPT	Back	11½"	6½"	7"
421	2-Way	4" x 2½" x 2½"	Female NPT	Top / Bottom	12"	5½"	7"
422	2-Way	6" x 2½" x 2½"	Female NPT	Back	11½"	7¼"	7 5/8"
423	2-Way	6" x 2½" x 2½"	Female NPT	Top / Bottom	12"	9½"	7 5/8"
430	3-Way	6" x 2½" x 2½" x 2½"	Groove	End	23¼"	8½"	7"
431	3-Way	6" x 2½" x 2½" x 2½"	Groove	Back	19¾"	10½"	7"
432	3-Way	6" x 2½" x 2½" x 2½"	Groove	Top / Bottom	19¾"	8½"	7"
433	3-Way	6" x 2½" x 2½" x 2½"	Female NPT	End	23¼"	8½"	7"
434	3-Way	6" x 2½" x 2½" x 2½"	Female NPT	Back	19¾"	10½"	7"
435	3-Way	6" x 2½" x 2½" x 2½"	Female NPT	Top / Bottom	19¾"	8½"	7"
440	4-Way	6" x 2½" x 2½" x 2½" x 2½"	Groove	End	30¼"	8½"	7"
441	4-Way	6" x 2½" x 2½" x 2½" x 2½"	Groove	Back	26¾"	10½"	7"
442	4-Way	6" x 2½" x 2½" x 2½" x 2½"	Groove	Top / Bottom	26¾"	8½"	7"
443	4-Way	6" x 2½" x 2½" x 2½" x 2½"	Female NPT	End	30¼"	8½"	7"
444	4-Way	6" x 2½" x 2½" x 2½" x 2½"	Female NPT	Back	26¾"	10½"	7"
445	4-Way	6" x 2½" x 2½" x 2½" x 2½"	Female NPT	Top / Bottom	26¾"	8½"	7"
450	4-Way	6" x 2½" x 2½" x 2½" x 2½" (Square)	Groove	Back	14¼"	10½"	7"
451	4-Way	6" x 2½" x 2½" x 2½" x 2½" (Square)	Groove	Top / Bottom	14¼"	8"	7"
460	6-Way	8" x 2½" x 2½" x 2½" x 2½" x 2½" x 2½"	Groove	End	44¼"	9¾"	7"

Specify Finish:

- ☐ **-RB** Rough Brass
- ☐ **-PB** Polished Brass
- ☐ **-PC** Polished Chrome

Specify Orientation:

- ☐ -Horizontal (standard)
- ☐ **-V** Vertical

Specify Wall Plate Lettering:

- ☐ **-WH** Wall Hydrant
- ☐ **-PT** Fire Pump Test

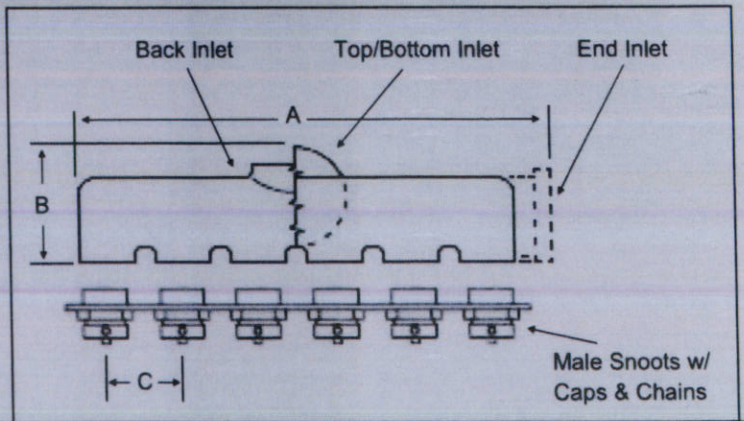

222 Bemis Road, Fitchburg, MA 01420 | Tel: 978-345-7570 | Fax: 978-345-7572
www.americanfirehose.com | sales@americanfirehose.com

Siedle Steel - Video Door station - Intercom Unit
Recess mounted with 2 push buttons (One shown)

BALDWIN

6963 - BRISTOL
ESTATE HANDLESET

SPECIFICATIONS

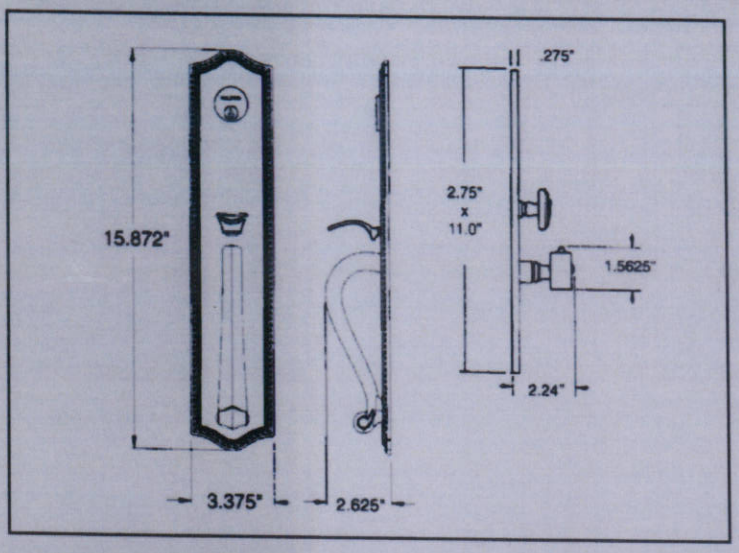

> Accessibility Code (ADA) A117.1 for all levers.

> Certified by Underwriters Laboratories (UL) for use on fire doors up to three-hour rating

> U L10C / UBC 7-2 (1997) Positive Pressure Rated, UL10B Pressure Rated

> Material: Solid Forged Brass

SHOWN WITH LEVER 5104

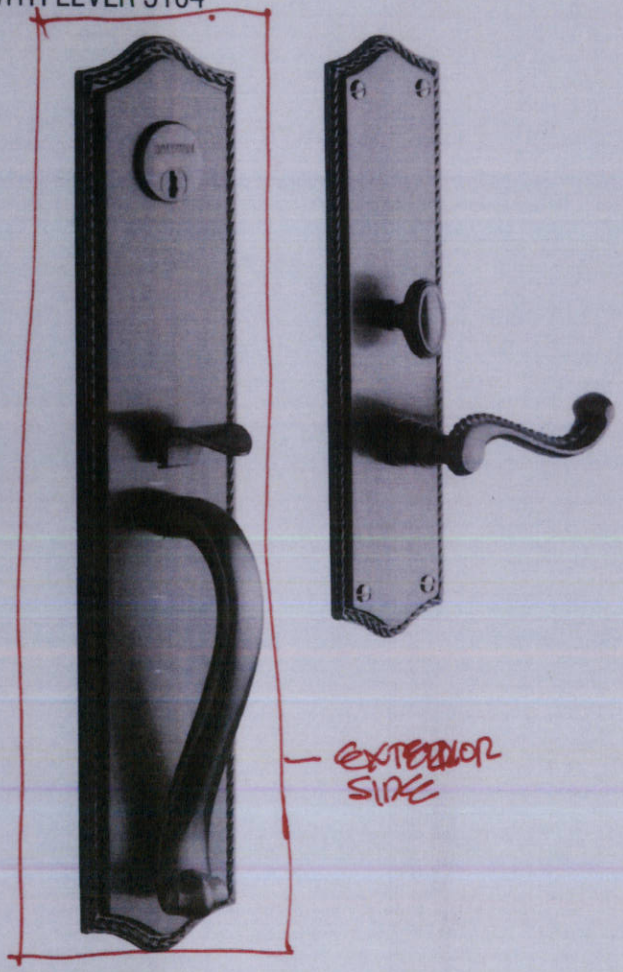

TIER 1 FINISHES

TIER 2 FINISHES

19701 Da Vinci · Lake Forest · California · 92610 · CUSTOMER SERVICE: 800.437.7448 · 8AM - 5PM EST · FAX: 800.255.9785
www.baldwinhardware.com

MAIN ENTRANCE DOOR HARDWARE

IMAGES – DECORATIVE ROSES

Classic knob w/ Squared Rope rose
DEADBOLT WITH ESCUTCHEON (NON-INTERCONNECT)

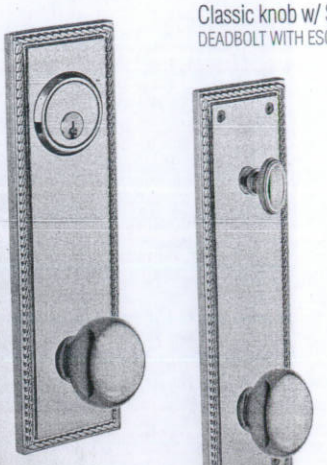

5405.xxx.D1JSR

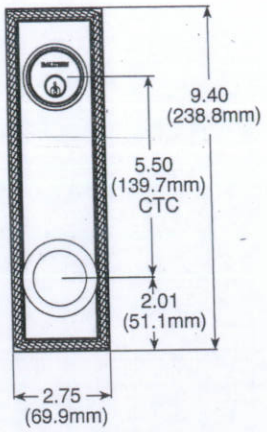

Approx. Size	Item #	Function	Wt.	031, 050, 102 112, 150, 151 190, 260, 264	003, 402 412, 452
10″	5405.xxx.D1JSR	Single Cyl. Ddblt: 2-3/8″ backset	5.7	$315	325
10″	5405.xxx.D2JSR	Double Cyl. Ddblt: 2-3/8″ backset	6.0	331	340
10″	5406.xxx.D1JSR	Single Cyl. Ddblt: 2-3/4″ backset	5.7	315	325
10″	5406.xxx.D2JSR	Double Cyl. Ddblt: 2-3/4″ backset	6.0	331	340

Not available with adjustable backset latch. Please order based on required backset.

Egg knob w/ Oval rose
PASSAGE, PRIVACY & DUMMY

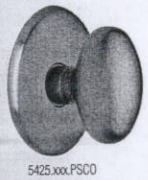

5425.xxx.PSCO

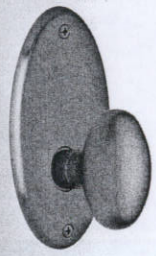

5425.xxx.PSEO

5425.xxx.PSJO

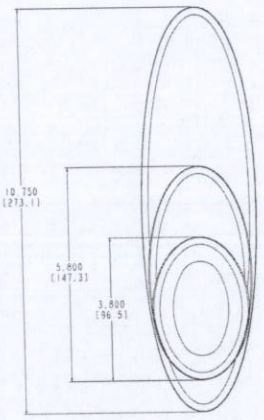

Knob PROJECTION off door: 2.54″

Approx. Size	Item #	Function	Wt.	030, 031, 050 102, 112, 150, 151, 190, 260, 264	003, 055 056, 402 412, 452
3″	5425.xxx.FDCO	Full Dummy	3.2	$100	121
3″	5425.xxx.IDCO	Half Dummy	1.8	50	61
3″	5425.xxx.PSCO	Passage: 2-3/8″ backset	3.7	121	147
3″	5425.xxx.PVCO	Privacy: 2-3/8″ backset	3.8	121	147
3″	5426.xxx.PSCO	Passage: 2-3/4″ backset	3.7	121	147
3″	5426.xxx.PVCO	Privacy: 2-3/4″ backset	3.8	121	147
3″	RS54.xxx.PSCO	3″ Passage Roses Only (pair)	1.0	42	58
3″	RS54.xxx.PVCO	3″ Privacy Roses Only (pair)	1.0	42	58
5″	5425.xxx.FDEO	Full Dummy	3.6	142	163
5″	5425.xxx.IDEO	Half Dummy	2.2	71	82
5″	5425.xxx.PSEO	Passage: 2-3/8″ backset	4.1	163	189
5″	5425.xxx.PVEO	Privacy: 2-3/8″ backset	4.1	163	189
5″	5426.xxx.PSEO	Passage: 2-3/4″ backset	4.1	163	189
5″	5426.xxx.PVEO	Privacy: 2-3/4″ backset	4.1	163	189
5″	RS54.xxx.PSEO	5″ Passage Roses Only (pair)	1.4	84	100
5″	RS54.xxx.PVEO	5″ Privacy Roses Only (pair)	1.4	84	100
10″	5425.xxx.FDJO	Full Dummy	4.7	200	226
10″	5425.xxx.IDJO	Half Dummy	3.3	100	113
10″	5425.xxx.PSJO	Passage: 2-3/8″ backset	5.2	221	252
10″	5425.xxx.PVJO	Privacy: 2-3/8″ backset	5.2	221	252
10″	5426.xxx.PSJO	Passage: 2-3/4″ backset	5.2	221	252
10″	5426.xxx.PVJO	Passage: 2-3/4″ backset	5.2	221	252
10″	RS54.xxx.PSJO	10″ Passage Roses Only (pair)	2.2	142	163
10″	RS54.xxx.PVJO	10″ Privacy Roses Only (pair)	2.2	142	163

Egg knob w/ Oval rose
DEADBOLT WITH ESCUTCHEON

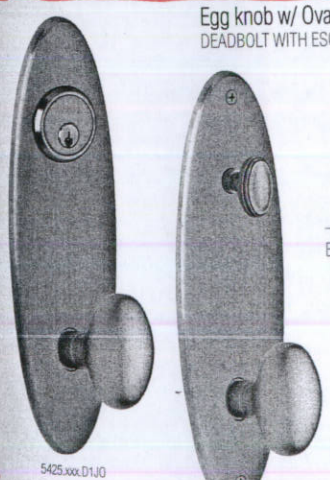

5425.xxx.D1JO

– Now available –
E1JO Interconnect
UL & UL/c

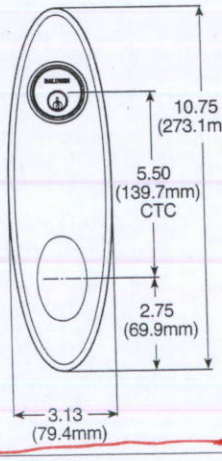

Approx. Size	Item #	Function	Wt.	031, 050, 102 112, 150, 151 190, 260, 264	003, 055, 056 402, 412, 452
10″	5425.xxx.D1JO	Single Cyl. Ddblt: 2-3/8″ backset*	5.6	$315	325
10″	5425.xxx.D2JO	Double Cyl. Ddblt: 2-3/8″ backset*	5.9	331	340
10″	5425.xxx.E1JO	Interconnect w/ adjustable backset		440	450
10″	5426.xxx.D1JO	Single Cyl. Ddblt: 2-3/4″ backset*	5.7	315	325
10″	5426.xxx.D2JO	Double Cyl. Ddblt: 2-3/4″ backset*	6.0	331	340

*Not available with adjustable backset latch. Please order based on required backset

To order with lever, please refer to our 3-step process on pg 6.

#4 JOY SERVANT ENTRY – IN POLISHED BRASS

HAND CRAFTED BALDWIN SINCE 1946

Products Accessories Estate Door Accessories **0017.003**

LETTER BOX PLATES

MODEL #:0017.003

AVAILABLE FINISHES

Shown: *Lifetime Polished Brass*

Click Image to Zoom

Enlarge Image

FEATURES

LIFETIME PVD

Product Highlights | Technical Information | Warranty | Related Products

Letter Box Plates, 10" x 3"
Designed for use on exposed doors to prevent wind from forcing rain and snow through the slot
Very large opening will accommodate small packages
Bronze spring keeps flap tightly closed at all times
Hinging back plate provides additional privacy and decorative appearance.
Not suitable for vertical installation

CRAFTSMANSHIP

The tradition of craftsmanship and commitment to quality run deep at Baldwin. Since 1946, skilled artisans have forged Baldwin Estate hardware by hand, meticulously operating forges and hand-polishing each intricate knob, lever, and handleset. We still use time-tested techniques, such as heat forging, metal plating, and hand polishing. While many hardware manufacturers use the casting technique, Baldwin uses forging to create the flawless look that when polished, will

MAIN ENTRANCE MAIL SLOT

STANLEY Hardware

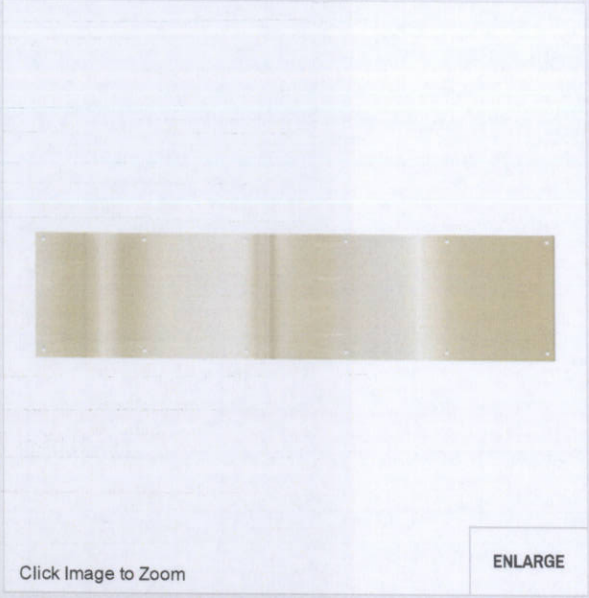

Click Image to Zoom

ENLARGE

V1996 Kickplates

V-PAC

8" x 34", Brass

Stock # N244-079

Finish:

Selected: Brass

Size:

*Not all sizes are available in all finishes.

6" x 30"

8" x 34"

+ ADD TO PROJECT LIST

WHERE TO BUY »

Product Overview

- Plate is easy to install
- Plastic cover protects finish during installation
- Includes fasteners
- Aluminum material
- Anodized surface for extra durability

Home Designs
A variety of knobs, pulls, cabinet catches and hinges designed to add the final detail to any kitchen or bathroom.

Package Specifications

V-PAC

Stock #	N244-079
Catalog #	V1996
Material	Aluminum
UPC	038613244078
Quantity Per Package	1
Quantity Per Box	2 PK

Documents

PDF Technical Drawing

IMAGE Line Art

Related Products

MAIN ENTRANCE DOOR KICK PLATE

English Gray

Friendly and inviting, this strong neutral hue is one of the most versatile colors for home exteriors.

U.S. Only

Note: *It is difficult to reproduce the color clarity and actual color blends of these products. Before selecting your color, please ask to see several full-size shingles.*

PRODUCT INFORMATION SHEET

Slateline® Shingles

"The Look of Slate At A Fraction Of The Cost"

PRODUCT INFORMATION

"Slateline's bold shadow lines and tapered cut-outs create the appearance of depth and dimension."

Slateline® Lifetime Designer Shingles Offer You These Great Benefits:

- **Affordable Luxury . . .** Slateline® Shingles are only a fraction of the cost of traditional slate or wood shakes
- **Sophisticated Design . . .** Artisan-crafted shapes combined with a dimensional design result in a sophisticated beauty unmatched by typical shingles
- **Custom Color Palette . . .** Specially formulated color palette is designed to accentuate the shingle's natural appeal
- **High Performance . . .** Designed with Advanced Protection® Shingle Technology, which reduces the use of natural resources while providing excellent protection for your home (visit gaf.com/aps to learn more)
- **StainGuard® Protection . . .** Helps ensure the beauty of your roof against unsightly blue-green algae*
- **Highest Fire Rating . . .** Class A fire rating from Underwriters Laboratories
- **Stays In Place . . .** Dura Grip™ Adhesive seals each shingle tightly and reduces the risk of shingle blow-off. Shingles warranted to withstand winds up to 130 mph (209 km/h)!†
- **The Ultimate Peace Of Mind . . .** Lifetime ltd. transferable warranty with Smart Choice® Protection (non-prorated material and installation labor coverage) for the first ten years*
- **Perfect Finishing Touch . . .** For the best look, use Timbertex® Premium Ridge Cap Shingles with StainGuard® protection

† This wind speed coverage requires special installation; see *GAF Shingle & Accessory Ltd. Warranty* for details.

* See *GAF Shingle & Accessory Ltd. Warranty* for complete coverage and restrictions. The word "Lifetime" means as long as the original individual owner(s) of a single-family detached residence [or the second owner(s) in certain circumstances] owns the property where the shingles are installed. For owners/structures not meeting the above criteria, Lifetime coverage is not applicable.

COLORS/AVAILABILITY

- COLORS: Antique Slate, Emerald Green, English Gray, Royal Slate, and Weathered Slate
- REGIONAL AVAILABILITY: Northeast, Southeast, Southwest, and Central Areas

APPLICABLE STANDARDS & PROTOCOLS

- UL 790, Class A
- Dade County Approved 13-1104.08
- Florida Building Code Approved FL10124-R12
- UL 997 modified to 110 mph
- ASTM D7158, Class H
- ASTM D3161, Class F
- ASTM D3018, Type 1
- ASTM D3462
- ICC Evaluation Services ESR-1475
- ICC Evaluation Services ESR-3267***
- Texas Department of Insurance
- CSA A123.5-98

Effective 7/1/08, existing NYC MEA's may be used but are no longer required.

***Obtained ESR 3267 evaluation from ICC Evaluation Services based on compliance with the requirements of AC438, an acceptance criteria established by ICC Evaluation Services to evaluate asphalt shingles that contains performance tests in addition to those required by the building code. (ICC Evaluation Services provides technical evaluations of building products that directly address the issue of code compliance. Building inspectors use these evaluation reports to help determine code compliance and enforce building regulations.)

PRODUCT/SYSTEM SPECIFICS††

- Fiberglass Asphalt Construction
- Dimensions (approx): 17" x 40"
- Exposure: 7.5"
- Bundles/Square: 3
- Pieces/Square: 48
- Nails/Square: 288
- StainGuard® Protection: Yes
- Hip/Ridge: Timbertex®
- Starter: WeatherBlocker™

††Refer to complete application instructions.

INSTALLATION

Detailed instructions are provided on the inside of each bundle wrapper of Slateline® shingles. Application sheets may also be obtained at www.gaf.com .

BENJAMIN MOORE CLASSIC PAINT COLORS

DOORS @ JOY STREET ELEVATION
ESSEX GREEN PM-11

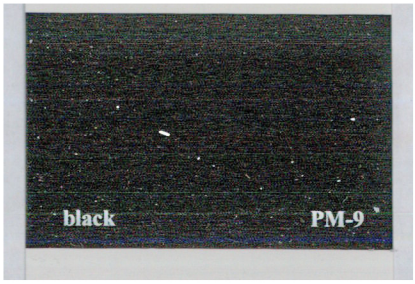

IRON WORK FRONT/REAR, AND
WINDOWS & DOORS @ REAR ELEVATION
BLACK PM-9

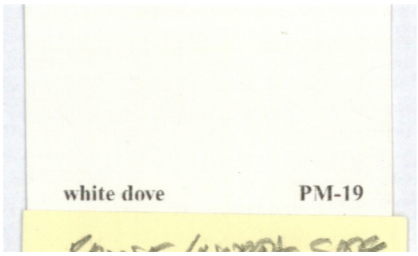

WINDOWS & TRIM @ FRONT & NORTH ELEVATIONS,
REAR TRIM AND SIDING
WHITE DOVE PM-19

BROWNSTONE REPAIR PRODUCT

conproco® CORPORATION

MIMIC

Trowel applied, color matched, single component repair mortar for natural stone, cast stone and terracotta.

WHERE TO USE
Repair and reconstruct brownstone, sandstone, limestone, cast stone, terracotta and concrete.

PERFORMANCE CHARACTERISTICS

Low shrinkage
- Maintains integrity of repair, resists cracking.

Thermal compatibility
- Prevents delamination due to temperature change.

Durable
- Resistant to weathering action, excellent freeze/thaw stability and abrasion resistance.

Very low permeability
- Resistant to deicing salts, chloride, and chemical attack, and environmental pollution.

Breathability
- Will not cause damage to structure by restricting moisture vapor flow.

Shaveable
- Recreate sharp edges and architectural details.

Single component
- Easy to batch in less than full pail quantities.

Extensive color spectrum
- Available in 19 standard colors and factory color matching.

SURFACE PREPARATION

- Remove loose and deteriorated material, laitance, dirt, dust, oil and any surface contaminants that will inhibit proper bond.
- Saw cut edges with a diamond blade at a 90° angle to eliminate feather edging. Avoid polishing the edges, as this will inhibit bond.
- Avoid bruising or micro cracking during surface preparation. Refer to ICRI Surface Preparation Guide 03732.
- Repair zone must be a minimum of 1/2 inch deep, of simple geometry, with no complex edge conditions.
- Avoid long narrow repairs; these have a greater tendency to crack.
- Apply *Conpro Start* where a consolidant is of benefit.
- Saturate substrate with clean water, (saturated surface dry/SSD), with no standing water during *Priming* or *Application*.
- Remove concrete from corroded steel and several inches beyond to expose non-corroded steel.
- Provide a 3/4 inch clearance between the concrete and steel.
- Damaged reinforcing steel should be inspected by a qualified engineer and appropriate action taken.

PRIMING

Stone, Terracotta and Concrete
- Prime the prepared substrate including all edges with a bond coat of *MIMIC*. Work the bond coat into the substrate to ensure intimate contact and establish bond. The repair material must be applied while bond coat is wet. If the bond coat dries, remove and recoat.

Embedded Metal and Steel
- Remove all scaling rust from embedded metal and steel.
- Apply *ECB* anti-corrosion coating.

MIXING

- Mechanically mix using a low speed drill (400 - 600 rpm) and mixing paddle or mortar mixer.
- Pour 2-1/2 quarts of potable water into a clean mixing vessel and slowly add all of the powder.
- Mix continuously for 3 minutes to a uniform, lump-free consistency.
- Add up to 1 pint of additional water if needed.
- Additional water will affect final color. For multiple batches do not vary the water addition rate.
- Mix only as much material as can be placed in 15 - 20 minutes.
- Do not over mix, as this will entrain excess air.
- Do not re-temper, this can affect color.

APPLICATION

- At the time of application, surfaces should be saturated surface dry (SSD) but hold no standing water.
- Follow instructions for *Priming*.
- Force the material against the edges of the repair, working toward the center.
- Material may be applied in multiple lifts of not less than 1/2 inch and no greater than 2 inches.
- Consolidate each lift and allow to stiffen to thumb-print hard before continuing.
- Scratch (cross-hatch) each lift to prepare surface for subsequent lift.
- Over-build final lift by 1/4 inch.
- Shave to final form with trowel edge up to 2 hours after application.
- Do not overwork the finish.
- Finishing techniques and the age of the material when shaved will have a significant affect on the appearance of the color.

CURING

- Keep damp with a fine mist of water for 24 hours. Refer to ACI 308R-01 for detailed curing recommendations. If repair is inaccessible, tape polyethylene over area to retain moisture. Do not allow polyethylene to contact material.
- Protect repair from direct sunlight, wind, rain and frost during curing period.

CLEAN UP

- Clean tools and equipment with water immediately after use. Cured material must be removed mechanically.

MIMIC

THEORETICAL YIELD

Yield per Pail	Repair Depth	Square Feet
0.42 cubic feet	1/2 Inch	10.08
0.42 cubic feet	1 Inch	5.04
0.42 cubic feet	1.5 Inches	3.36
0.42 cubic feet	2 Inches	2.52

PRODUCT HANDLING

Packaging

- 50 lbs. plastic pails.

Shelf Life

- 18 months when properly stored.

Storage

- Transport and store in cool, clean, dry conditions in unopened containers.
- High temperature or high humidity will reduce shelf life.

LIMITATIONS

- Do not apply unless substrate and ambient temperature can be maintained at a minimum of 40°F for 24 hours. Refer to ACI Cold Weather Application Guidelines.
- Cold mixing water and low temperature will retard set. Hot water and high temperature will accelerate set.
- Protect application from precipitation and high wind for at least 24 hours.
- Do not add more water than specified – this will affect color and weaken material.
- Do not re-temper, as this will affect color.
- Avoid overworking material during placement as this will affect color and cause surface checking.
- Do not allow polyethylene or burlene to touch surface while curing as this will cause whitening of the material.

HEALTH AND SAFETY

- Product is alkaline.
- Do not ingest.
- Avoid breathing dust.
- Avoid contact with skin and eyes.
- Refer to Material Safety Data Sheet (MSDS) for additional information.

FIRST AID

- In case of skin contact, wash thoroughly with soap and water.
- For eye contact, flush immediately with a high volume of water for at least 15 minutes and contact a medical professional.
- For respiratory problems, remove person to fresh air.

DISPOSAL

- Dispose of material in accordance with local, state or federal regulations.

TECHNICAL DATA

Physical state and appearance		Dry, pigmented powder		
Base		Portland cement		
pH	Wet mix	>12		
Water/dry material ratio		0.12		
Water/cement ratio		0.50		
Dry bulk density	ASTM C188	93 lbs./ft.^{3}		
Setting time by vicat needle	ASTM C191	Initial 30 minutes – Final 120 minutes		
Water vapor transmission	ASTM E96	5.7 perms		
Length change	ASTM C157	500 µstrains @ 28 days		
Slant shear bond strength – epoxy	ASTM C882	1250 psi		
		7 Days	**14 Days**	**28 Days**
Compressive strength* – psi	ASTM C109	3100	3400	3850
Tensile strength – psi	ASTM C307	250	475	530
Volatile Organic Compounds – VOC	Actual	0 g/L		

*Data presented applies to non-pigmented base material where noted.

FOR PROFESSIONAL USE ONLY

Conproco Corp. warrants this product for one year from date of installation to be free from manufacturing defects and to meet the technical properties on the current technical data sheet if used as directed within shelf life. User determines suitability of product for use and assumes all risks. Buyer's sole remedy shall be limited to the purchase price or replacement of product exclusive of labor or cost of labor. September 2015.

NO OTHER WARRANTIES EXPRESS OR IMPLIED SHALL APPLY INCLUDING ANY WARRANTY OF MERCHANTABILITY OR FITNESS FOR A PARTICULAR PURPOSE. CONPROCO CORP. SHALL NOT BE LIABLE UNDER ANY LEGAL THEORY FOR SPECIAL OR CONSEQUENTIAL DAMAGES.

conproco® CORPORATION

17 PRODUCTION DRIVE, DOVER, NEW HAMPSHIRE 03820
TELEPHONE 800.258.3500 • FAX 603.743.5744 • WEB ADDRESS www.conproco.com